INNOBIZ

AGE VALVE Co., Ltd.

AGECT-TOT-2020

AGE

Reasonable Industrial Control Valves

BUTTERFLY VALVE | PNEUMATIC CONTROL VALVE | PRESSURE REGULATING VALVE | ELECTRIC CONTROL VALVE

Your trusted business partner

AGE® VALVE

Founded on January 10, 1994, AGE VALVE, formerly DAEGI Industry, focuses on localization of design, machining, assembly, and manufacturing of all valves necessary for industrial facilities.
AGE is a valve manufacturer with decades of expertise and technical verification.

Our efforts have been focused on achieving efficient and reasonable automation that can solve difficulties caused by improper environments or service conditions in each field process. We have developed and adopted an original structure and operation principles, as well as control circuits to facilitate installation and maintenance, and completed products with economy and versatility ensuring high performance.

AGE VALVE focuses on the selection and management required for actualizing the performance of the existing regulating valve. We also focus our efforts on supplying package-type products suitable for the current environment as well as the convenience of customers. We have adopted initials as logos from the perspective of supplying advanced, general, and economical products and promise to live up to these objectives.

The staff of AGE VALVE Co., Ltd.

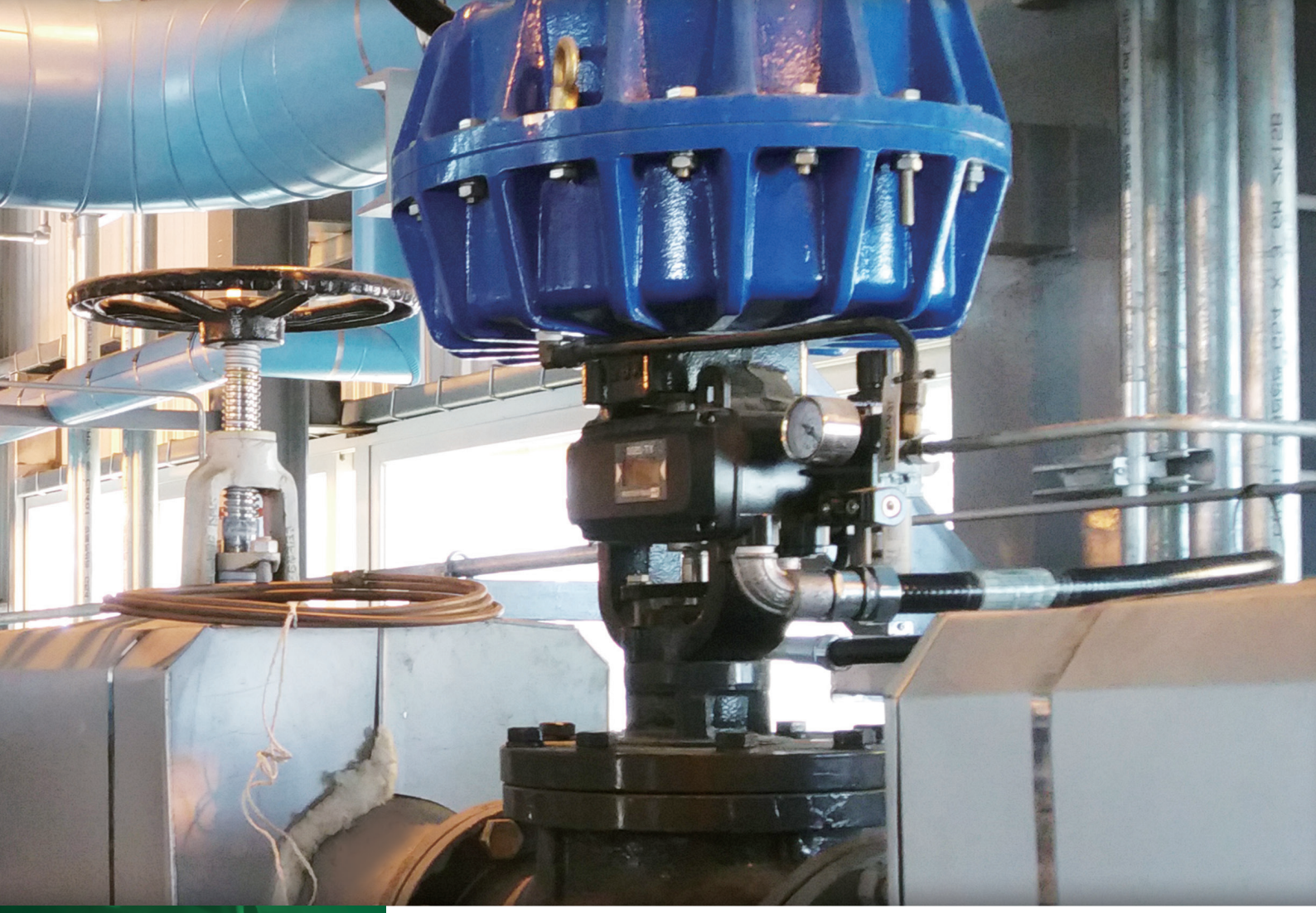

INDEX

- Introduce

Certificates 4
Ordering Information 5

- Butterfly Valve

Concentric Butterfly Valve 6
2-Off Set Type Butterfly Valve 8
2-Off Set Type Crescent Disc Butterfly Valve 11
3-Off Set Type Butterfly Valve 12
PTFE / EPDM Lined Butterfly Valve 13

-Pneumatic Control Valve

Pneumatic On Off Globe Valve 14
Pneumatic On Off Butterfly Valve 15
Pneumatic On Off Ball Valve 16
Pneumatic Step On Off Butterfly Valve 17
Pneumatic Control Globe Valve 18
Pneumatic Control Butterfly Valve 19

- Pressure Regulating Valve

1st Pressure Regulating Valve 20
2nd Pressure Reducing Valve 22

- Electric Control Valve

Electric On Off Valve 24
Electric Control Valve 25

- Technical Data

Globe Valve Technical Data 26
Butterfly Valve Technical Data 30
Dimension 35

Certificates

CERTIFICATE OF TRADEMARK REGISTRATION

UTILITY MODEL REGISTRATION CERTIFICATE (2-STEP ON-OFF)

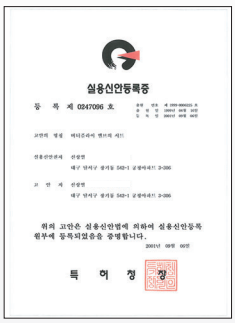

UTILITY MODEL REGISTRATION CERTIFICATE (BUTTERFLY VALVE SEAT)

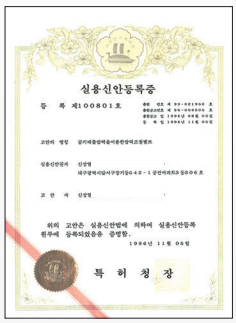

UTILITY MODEL REGISTRATION CERTIFICATE (PNEUMATIC REGULATING VALVE)

UTILITY MODEL REGISTRATION CERTIFICATE (SEAT STRUCTURE)

CERTIFICATE OF DESIGN REGISTRATION

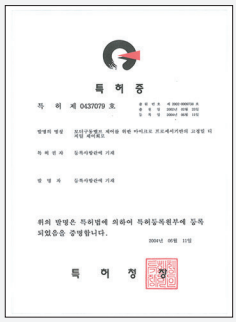

Microprocessor-based high precision digital control circuit for motor drive valve control

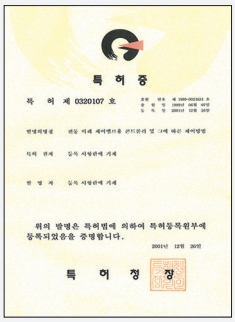

Controller for electric proportional control valve and control method

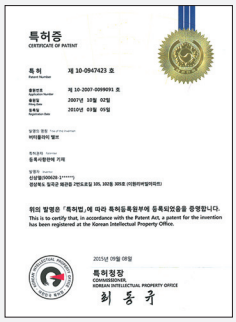

Butterfly Valve

Butterfly Valve

Pneumatic Valve Actuator

Butterfly Valve

Pneumatic Valve Actuator

CE CERTIFICATE Pressure Reducing Valve

CERTIFICATE OF REGISTRATION

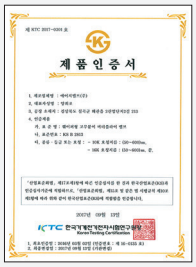

KS CERTIFICATE OF PRODUCT

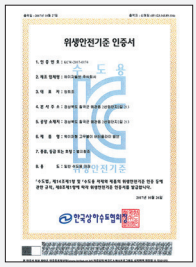

KC SANITATION CERTIFICATION

CE CERTIFICATE Electric Actuator

CE CERTIFICATE Control Globe Valve

CE CERTIFICATE Control Globe Valve

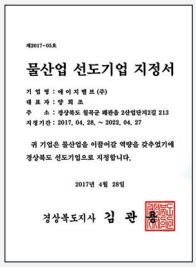

Designated Leader in Water Industry

Ordering Information

MANUAL BUTTERFLY VALVE

① Body Material		② Seat Material		③ End Connection		④ Body Type	
2	Cast Iron	2	Rubber(for Lined Type)	1	10K, 150#, PN10	1	Lever Operated
3	Stainless Steel	3	Rubber	1	20K, 300#, PN16	2	Gear Operated
4	Ductile Iron	4	Stainless steel	2	30K, PN25	C	Crescent Disc BFV
5	Cast Steel	5	Filled TFE	3	40K, 600#, PN40	X	Bare Shaft
6	Aluminum	6	PTFE over Molded	4	Option		
7	Option	7	Option	5			

PNEUMATIC CONTROL VALVE

① Operating		② Actuator Type		③ Action(air)		④ Body Material		⑤ Seat Material		⑥ End Connection		⑦ Body Type	
30	On off	D	Double acting	C	Fail close	2	Cast Iron	2	Rubber(for Lined Type)	1	10K, 150#, PN10	B	Butterfly
32	Step on off	S	Single acting	O	Fail open	3	Stainless Steel	3	Rubber	2	20K, 300#, PN16	C	Crescent Disc BFV
33	Proportional			L	Fail last	4	Ductile Iron	4	Stainless steel	3	30K, PN25	G	2-way Globe
						5	Cast Steel	5	Filled TFE	4	40K, 600#, PN40	M	3-way Mixing
						6	Aluminum	6	PTFE over Molded	5	Option	T	3-way Diverting
						7	Option	7	Option			S	2-way Ball
												D	Damper
												K	Gate

PRESSURE REGULATING VALVE

① Operating		② Actuator Type		③ Action(air)		④ Body Material		⑤ Seat Material		⑥ End Connection		⑦ Body Type	
31	Regulating	1	1st Pressure	C	Fail close	2	Cast Iron	2	Rubber(for Lined Type)	1	10K, 150#, PN10	B	Butterfly
		3	2nd Pressure	O	Fail open	3	Stainless Steel	3	Rubber	2	20K, 300#, PN16	C	Crescent Disc BFV
						4	Ductile Iron	4	Stainless steel	3	30K, PN25	G	2-way Globe
						5	Cast Steel	5	Filled TFE	4	40K, 600#, PN40	S	2-way Ball
						6	Aluminum	6	PTFE over Molded	5	Option		
						7	Option	7	Option				

ELECTRIC CONTROL VALVE

① Operating		② Actuator Type		③ Action		④ Body Material		⑤ Seat Material		⑥ End Connection		⑦ Body Type	
40	On Off	1	110Vac	L	Fail Last	2	Cast Iron	2	Rubber(for Lined Type)	1	10K, 150#, PN10	B	Butterfly
41	Modulating	2	220Vac			3	Stainless Steel	3	Rubber	2	20K, 300#, PN16	C	Crescent Disc BFV
42	Step On Off	3	380Vac			4	Ductile Iron	4	Stainless steel	3	30K, PN25	G	2-way Globe
		4	440Vac			5	Cast Steel	5	Filled TFE	4	40K, 600#, PN40	S	2-way Ball
		5	24Vac			6	Aluminum	6	PTFE over Molded	5	Option		
		6	24Vdc			7	Option	7	Option				

Concentric Butterfly Valve

Model No. AGE23/43/33 Series

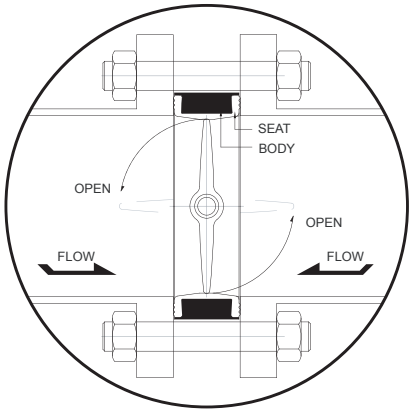

[Hard Bonded type]

Concentric butterfly valve -the rotating center of the spherical disc and shaft which coincide with the center of the circular seat and body interfering each other at specified position- is composed of an elastic seat, and excels in economical efficiency in large facilities, tight shut-off, low pressure drop and high recovery characteristic. Hard bonded rubber seated AGE231 Series provides various excellencies as compared others.

Application & Features

A major design advantage of the AGE231 Series meets international compatibility with the same body on world flange standards-ANSI Class 150, DIN 10/16, KS/JIS 10K in the applications in normal temperature and medium-low pressure services.

1 **MOUNTING PAD** (ISO 5211 Standard)

2 **HARD BONDED BODY/SEAT**
design facilitates field installation securing no possible leakage through flange connections.

3 **UNIQUE MOLDED MULTIPLE O-RING**
design and wide surface secure no leak of flange connection under anticipated thermal expansion of flange bolts.

4 **SELF-ENERGIZING SEAT**
design provides pressure endurance and relatively low seating torque. No abnormal torque occurs in low- temperature service.
Excellent Pressure rating, no deformation of seat and leak in the high surge of pressure caused by immoderate services.

5 **ENOUGH BODY THICKNESS**
insures required strength.

Standard Specifications

Valve Size	40 ~ 1800A (1.5” ~ 72”)
Flow Characteristics	Standard Butterfly (10:1 ~ 15:1)
Seat Leakage	ANSI Class VI
End Rating	KS/JIS 10K/16K/20K, ANSI 150#, PN10~16, etc.
Face to Face Dimension	ISO 5752, MSS SP67, JIS B2032, and API 609, KS B 2813
End Connection	WAFER, FLANGE, LUG
Flow Direction	Bi-Directional
Operating Pressure	20kg/cm^2 (MAX)
Operating Temperature	-20°C ~ 120°C (MAX)
Operator	Manual : Lever, Worm gear
	Automatic : Pneumatic, Electric, Hydraulic(On off, Control, Step), Pressure Regulator, etc.
Accessories	Dome Indicator, Tamper Switch, Chain Wheel, Lock Device, etc

Body	Disc	Shaft
Cast Iron Ductile Iron Cast Steel Stainless Steel	Stainless Steel Aluminum Bronze	Stainless Steel

Seat	Temperature Rating
EPDM	-10 ~ 120°C , -20~100°C
Buna-N	-10 ~ 100°C
Viton	-20 ~ 180°C

- More detailed requisition than above described standard specification, contact us for detail.

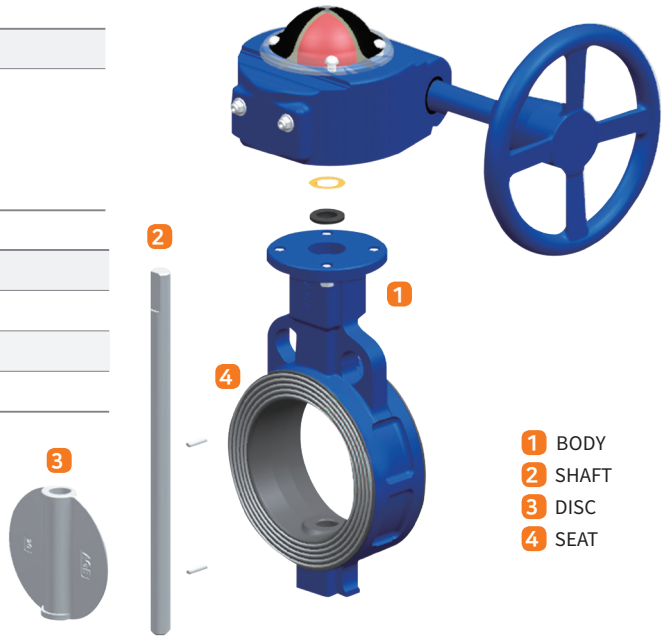

Torque Table

(unit:kg.m)

Valve Size	Shut Off Pressure (kg/cm^2)	
	5	10
50A	2.6	2.7
65A	3.2	3.4
80A	3.8	4
100A	5.7	6.2
125A	7.9	8.8
150A	10.9	13.3
200A	18.5	21
250A	28.8	33.9
300A	39	49
350A	58.2	83.7
400A	76.6	107.1
450A	98.8	158.2
500A	125	226.5

Cv Value

Valve Size	Disc Opening		
	30°	60°	90°
50A	8	47	70
65A	12	74	175
80A	20	115	265
100A	48	280	605
125A	99	410	1013
150A	145	680	1450
200A	239	1050	2680
250A	360	1683	4035
300A	509	2288	6010
350A	770	2810	7100
400A	1000	3850	9800
450A	1300	4980	12500
500A	1600	6100	15800

*Dimensions and design are subject to change without notice. Request for certified drawings for use in preparing piping layouts.

2-Off Set Type Butterfly Valve

Model No. AGE45/55/35 Series

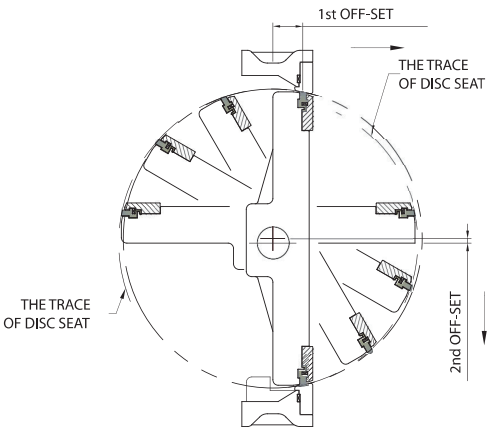

[Double seated type]

Standard AGE HP Butterfly valve is designed for medium low pressure and temperature(16BarG/203℃) ratings using carbon filled TFE and flexible profile of seat. Unique construction of dual seat provides excellent endurance to the thermal deformations of the body, valve disc and seat ring. This enables AGE HP Butterfly valve to be applied to medium low pressure saturated steam, water and oil shut off service.

Low torque, versatile control

Double eccentric & double seat construction minimizes seating / unseating torque and performs excellent on-off or throttling control.

Bubble-Tight shut off

Dual-seat ring design is not influenced by thermal deformations of valve body and disc in various temperature services.

Total valve concept

AGE HP Butterfly valve would effectively be substituted for convention ball, gate and globe valve in specific services and provides low cost in large size service.

Double eccentric disc

Rotating with the least contact with body-seat provides long life time.

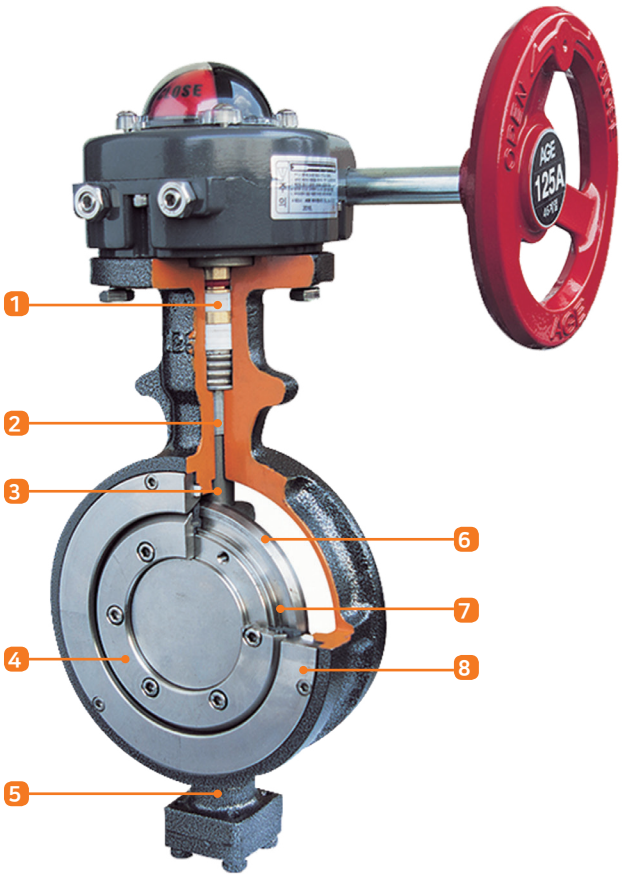

Valve Structure

1 **PACKING/ BACK UP RING**
Stainless steel reinforced PTFE or Graphite practices maintenance free operation. (Non adjusting shaft seal)

2 **BUSH**
Low friction bearing

3 **SHAFT**
Solid single piece stainless steel.

4 **DISC-SEAT RETAINER**
Fix Disc seat and Back up Ring

5 **VALVE BODY**
Compact and light weight wafer type provides low cost and space utility.

6 **DISC**
Tapered pin fixed double eccentric disc rotates with minimum friction of each seat.

7 **DISC-SEAT/BACK UP RING**
Stainless steel back up ring reinforced disc-seat keeps constant spherical figure with no regard to the expansion or contraction of the disc.

8 **BODY-SEAT**
Stainless steel seat ring provides tight shut-off with disc-seat with no regard to thermal deformation of the valve body.

Standard Specifications

Valve Size	25A ~ 1200A (1” ~ 48”)
Flow Characteristics	Standard Butterfly (15:1)
Seat Leakage	ANSI Class VI, Zero Leakage, Tight Shut off
End Rating	JIS 10K/20/30/40K, ANSI 150#, 300#, PN10~16, etc.
End Connection	WAFER, FLANGE, LUG
Flow Direction	Uni-Direction for Steam Bi-Direction for Water, Air
Operating Press / Temp	16kg/cm^2 203°C , 20kg/cm^2 /AMB
Operator	Manual : Lever, Worm gear
	Automatic : Pneumatic, Electric, Hydraulic(On off, Control, Step), Pressure Regulator, etc.
Accessories	Dome Indicator, Tamper Switch, Chain Wheel, Lock Device, etc

Body	Packing
Ductile Iron Cast Steel Stainless Steel	Concave PTFE packing with back-up ring&spring Asbestos yarn with spring Graphite with stainless steel back-up ring

Disc / Shaft	Seat	Temperature Rating
Stainless Steel	Reinforced TFE	Intermittent 250°C Constant 180°C
	MPE	Intermittent 400°C Constant 300°C

- More detailed requisition than above described standard specification, contact us for detail.

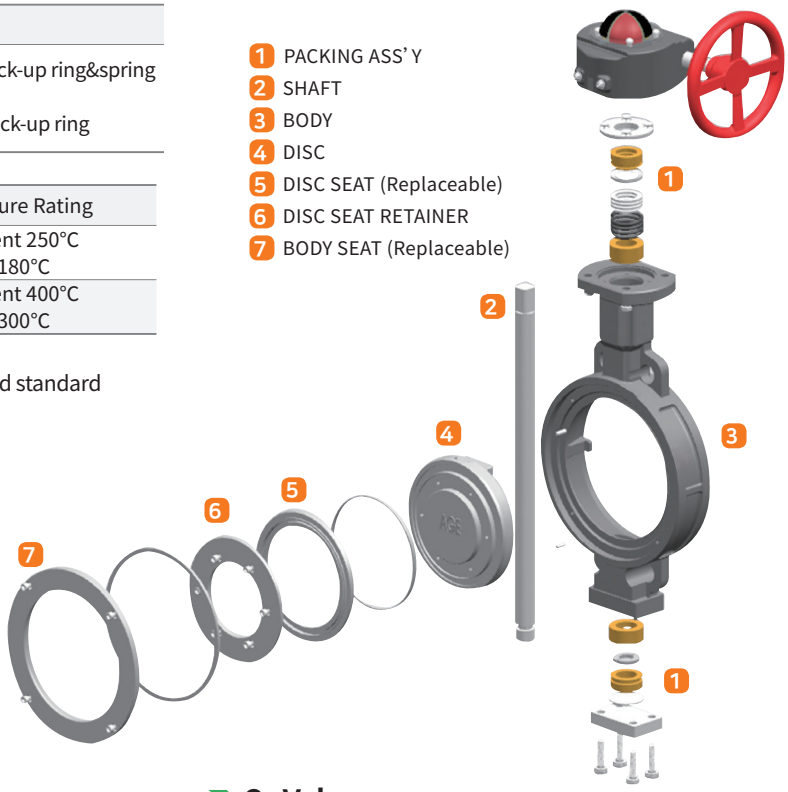

Torque Table

(unit:kg.m)

Valve Size	Shut Off Pressure (kg/cm^2)	
	5	10
50A	2.9	3.0
65A	3.5	3.7
80A	4.2	4.4
100A	6.3	6.8
125A	8.7	9.7
150A	12.0	14.6
200A	20.4	23.1
250A	31.7	37.3
300A	42.9	53.9
350A	64.0	92.1
400A	84.3	117.8
450A	108.7	174.0
500A	137.5	249.2

Cv Value

Valve Size	Disc Opening		
	30°	60°	90°
50A	12	41	85
65A	22	77	160
80A	36	125	260
100A	67	228	475
125A	108	370	770
150A	158	540	1125
200A	295	1012	2110
250A	470	1610	3350
300A	670	2300	4800
350A	966	3312	6900
400A	1260	4320	9000
450A	1650	5660	11800
500A	1800	5870	14600

*Dimensions and design are subject to change without notice. Request for certified drawings for use in preparing piping layouts.

Specifications

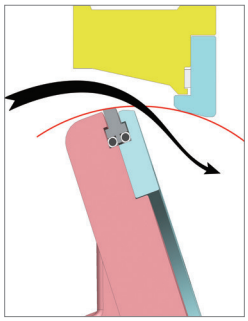

Unique cavity between disc and disc seat retainer offers moderate space for thermal expansion of seat ring, provides the lug to avoid Blow-out of seat ring due to high velocity of fluid at low opening position and permits variable temperature service.

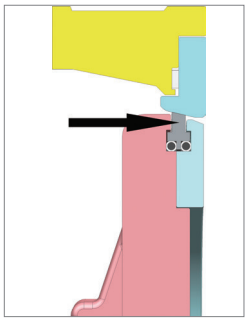

The force of DISC SEAT RING against facing BODY SEAT RING caused by fluid pressure in cavity is due to the line pressure generating reasonable seating force for tight shut off and durability.

Specific performance of two fold seat ring is not affected by the thermal deformance of the valve body and disc and provides excellent durability in ever changing fluid temperature service.

SEAT P/T Rating

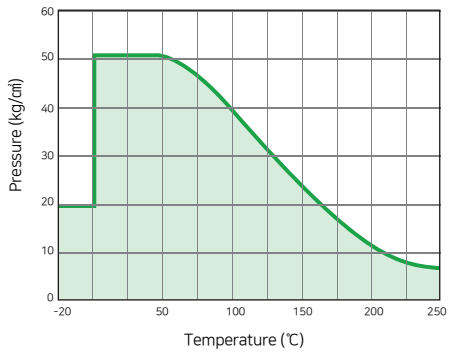

BODY P/T Rating

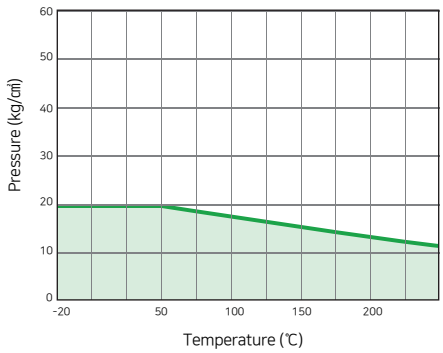

Flow Characteristics

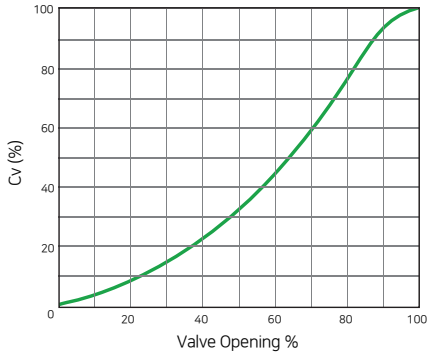

< Standard >

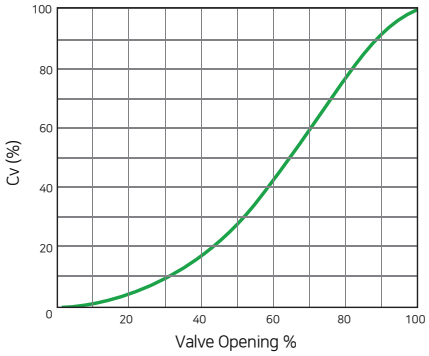

< Crescent disc >

Comparison with Conventional Applications

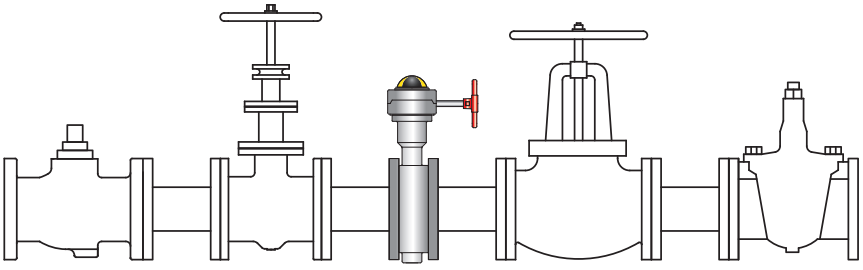

AGE HP Butterfly valve would effectively be substituted for convention ball, gate and globe valve in specific services.

- Compact design
- Light weight
- Excellent tighness
- Easy to operate

Off Set Type Crescent Disc Butterfly Valve

Model No. AGE55/35**C Series

AGE "C" Series Butterfly valve is designed for soft and safe operating of manual shut-off valve of high velocity fluid service. Throttling function in low opening position (4~20% opening) provides wide Rangeability(100:1) and safe opening.

Standard Specifications

Valve Size	25A ~ 1200A (1" ~ 48")
Flow Characteristics	Modified Equal Percentage (Equal Linear)
Seat Leakage	ANSI Class VI
End Rating	JIS 10K/20/30/40K, ANSI 150#, 300#, PN10~16, etc.
End Connection	WAFER, FLANGE, LUG
Flow Direction	Uni-Direction for Steam Bi-Direction for Water, Air
Operating Press / Temp	16kg/cm^2 203°C , 20kg/cm^2 /AMB
Operator	Manual : Lever, Worm gear
	Automatic : Pneumatic, Electric, Hydraulic(On off, Control, Step), Pressure Regulator, etc
Accessories	Dome Indicator, Tamper Switch, Chain Wheel, Lock Device, etc

Body	Disc	Shaft
Cast Steel Stainless Steel	Stainless Steel	Stainless Steel

Seat	Temperature Rating
Reinforced TFE	-20 ~ 200°C
TFM1600	-20 ~ 230°C
PEEK	-20 ~ 250°C

Packing	Concave PTFE with back-up ring & spring(Non-adjusting)

- More detailed requisition than above described.
  contact us for detail.

1 PACKING ASS' Y
2 SHAFT
3 BODY
4 DISC
5 DISC SEAT (Replaceable)
6 DISC SEAT RETAINER
7 BODY SEAT (Replaceable)

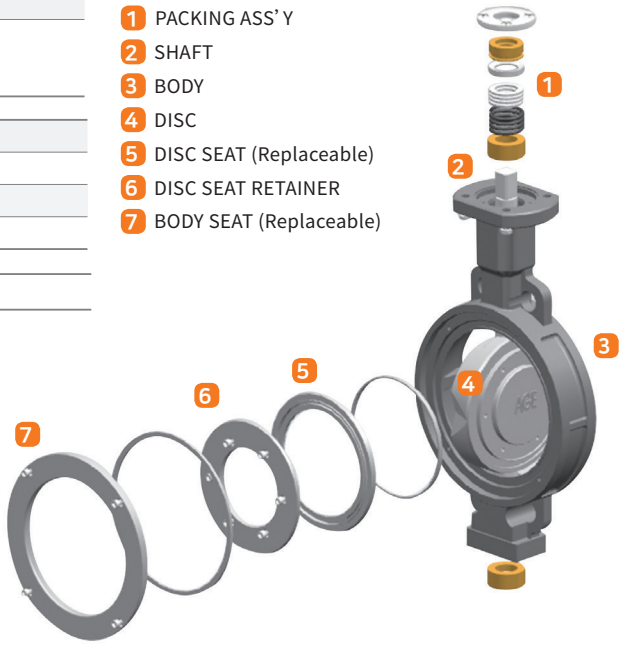

Structure Analysis

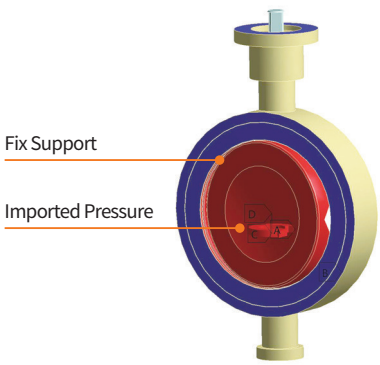

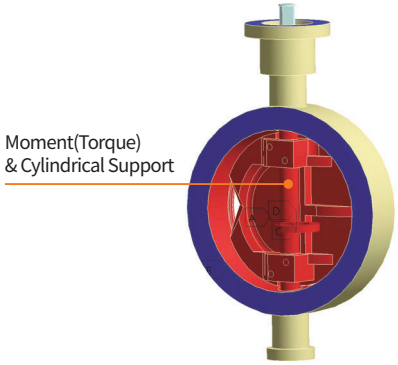

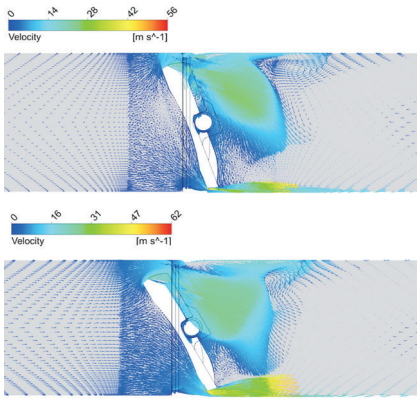

3-Off Set Type Butterfly Valve

Model No. AGE54/34 Series

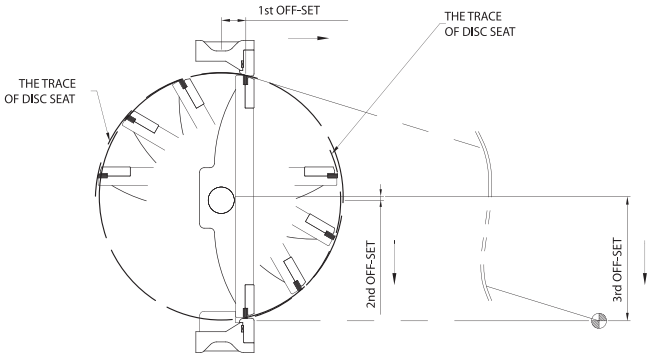

Standard AGE 3-Off Set butterfly valve may be substituted for the gate, globe and metal seated ball valve in service rating up to 500℃ , 40BarG. (650℃ , 63Bar ordermade) The flexibility of laminating seat and engagement angle of triple eccentric disc assure long service life and provide tight shut-off requirement under considerable variation of service temperature.

These properties permit AGE541 series can be applied to saturated and super heated steam service with facilities of operating and economic efficiency as compared with globe and gate valve.

Standard Specifications

Valve Size	100 ~ 1800A (1” ~ 72”)
Flow Characteristics	Standard Butterfly (15:1)
Seat Leakage	ANSI Class VI, V
End Rating	JIS 10K/20K, ANSI 150#, 300#, #600, PN10,16, 25, 40 etc.
Face to Face Dimension	ISO 5752, MSS SP67, JIS B2032, and API609.
End Connection	WAFER, FLANGE, LUG.
Flow Direction	Uni-Direction
Operating Temperature	-100°C ~ 500°C (~650°C order made)
Operator	Manual : Lever, Worm gear
	Automatic : Pneumatic, Electric, Hydraulic
Accessories	Dome Indicator, Tamper Switch, Chain Wheel, Lock Device, etc

Body	Disc	Shaft
Cast Iron Stainless Steel	Stainless Steel	Stainless Steel

Seat	Temperature Rating
Stainless Steel+Graphite	-100~500°C

Packing	Concave PTFE packing with back-up ring&spring Asbestos yarn with spring Graphite with stainless steel back-up ring

- Continuous service temperature range : 0 ~ 500°C
- More detailed requisition than above described standard specification, contact us for detail.

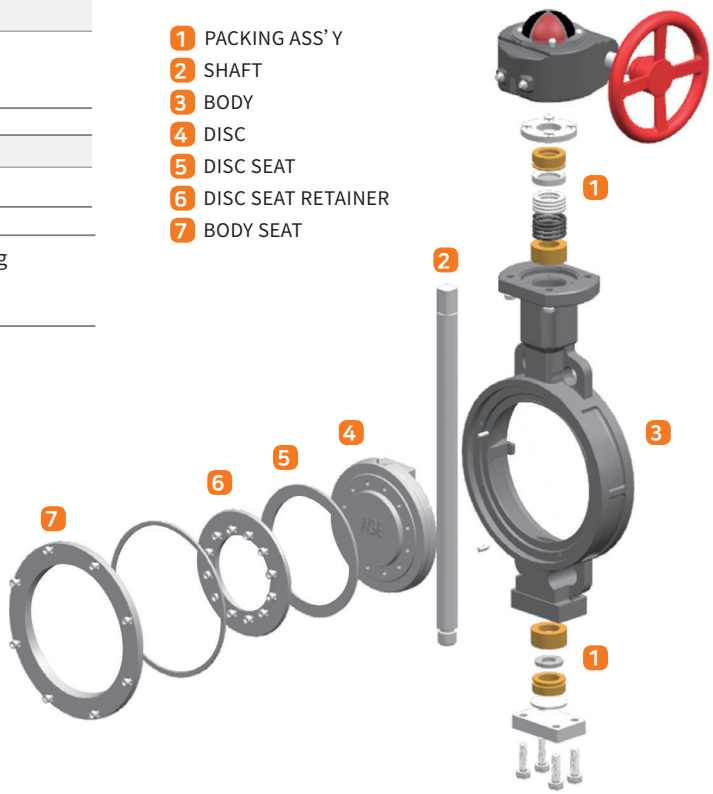

PTFE / EPDM Lined Butterfly Valve

Model No. AGE461/221 Series

Rubber energized PTFE/EPDM(etc.) seat and PTFE/EPDM(etc.) molded stainless steel disc to satisfy the pressure endurance and chemical resistance.

AGE461 Series

- 2-piece body design for easy maintenance and prospective alignment
- Two tapered shaft outlet type seat lip for triple shaft seal with combination of overmolded disc
- Top & bottom extended overmolded disc for triple shaft seal

1. PACKING ASS' Y
2. SHAFT
3. BODY
4. DISC
5. SEAT
6. ELASTOMER

Standard Specifications

Valve Size		50A ~ 350A (2" ~ 14")
Flow Characteristics		Standard Butterfly (10:1 ~15:1)
Seat Leakage		ANSI Class VI
End Rating		JIS 10K, 20K, ANSI 150#, PN10, PN16
End Connection		WAFER, FLANGE, LUG.
Flow Direction		Uni-Direction
MATERIAL	BODY	Ductile Iron, Stainless Steel, Cast Aluminum, etc.
	DISC	Teflon Overmolded Cast Steel (AGE461 Series)
		EPDM or NBR Overmolded Cast Steel (AGE221 Series)
	SEAT	Silicon Back-Up PTFE (AGE461 Series)
		EPDM or NBR (AGE221 Series)
	SHAFT	Stainless Steel

Cv Value

Valve Size	Disc Opening		
	30°	60°	90°
50A	13	43	66
65A	23	70	108
80A	40	123	193
100A	59	177	277
125A	99	304	475
150A	157	481	752
200A	247	794	1227
250A	464	1497	2277
300A	774	2480	3787
350A	979	3146	4789

Pneumatic On-off Globe Valve

Model No. AGE30 Series

Specification

Body

Type	2-way globe valve, 3-way globe valve
Size	15A(1/2")~400A(16")
Pressure Rating	JIS 10K ~ 63K, ANSI 150# ~ 900#, PN10 ~ 25, etc.
End Connection	FF, RF, BW, SW
Materials	Ductile iron, Cast steel, Stainless steel, etc.
Bonnet	Plain bonnet: -17°C ~ 230°C
	Extended bonnet: -45°C ~ -17°C , 230°C ~ 566°C
Gland type	Self adjusting type
Packing	Concave PTFE packing with back-up ring & spring
	Asbestos yarn with spring
	Graphite with stainless steel back up ring

Trim

Flow Characteristics	Quick opening
Materials	Plug : Hard faced SUS304/316/410, etc.
	Seat : Metal : Hard faced SUS304/316/410, etc.
	Soft : Filled TFE, etc.
	Stem : SUS304/316/410, etc.
Seat Leakage	Metal seat : ANSI Class IV
	Soft seat : ANSI Class VI

Actuator

Actuator type	Diaphragm / Multi spring cylinder
Operating type	Direct acting, reverse acting
Materials	Cylinder : AC4C-T6, Die-cast Aluminum / SS41
	Piston : AC4C-T6
	Piston ring : Nbr lip ring (commercially available)
	Diaphragm : H-Nbr
Air Supply	Diaphragm type : 2 - 4kg/cm^2
	Cylinder type : 4 - 7kg/cm^2
Air Connection	Rc1/4" , Rc3/8" , Rc1/2"
Ambient Temperature	-20°C ~ 80°C

Accessory

Limit switch, Proximity switch, Solenoid valve, Air set, Speed controller, Lock up valve, Volume booster, Manual handle, etc.

Pneumatic On-Off Butterfly Valve

Model No. AGE30 Series

AGE30 series double rack rotary actuator provides the solutions to high frequency operating, higher speed for specific service, volume, weight and torque problem. Cast triple guided piston and pin & roller overcome higher torque demand, corrosion resistance and possible mechanical shock caused by considered dynamic torque especially on butterfly valve service.

Specification

Body

Type	Concentric, 2-Off set, 3-Off set type
Size	25A(1")~1800A(72")
Pressure Rating	JIS 10K ~ 40K, ANSI 150# ~ 300#, PN10 ~ 25, etc.
End Connection	Wafer, Lug, Flange, etc.
Materials	Cast iron, Ductile iron, Cast steel, Stainless steel, etc.
Gland type	Non adjusting
Packing	Concave PTFE packing with back-up ring & spring
	Asbestos yarn with spring
	Graphite with stainless steel back up ring

Trim

Flow Characteristics	Standard Butterfly
Materials	Disc : Stainless steel, etc.
	Seat : Reinforced TFE, Rubber, SUS, etc.
	Stem : Stainless steel, etc.
Seat Leakage	Soft seat : ANSI Class VI
	Metal seat : ANSI Class IV

Actuator

Actuator type	Multi spring cylinder(rack&pinion gear, scotch yoke)
Operating type	Spring return, Double acting
Materials	Housing : Aluminum alloy
	Piston : Die-cast aluminum(101A)
	Cover : Die-cast aluminum(ADC12)
Air Supply	4 - 7kg/cm^2
Air Connection	Rc1/4" , Rc3/8" , Rc1/2"
Ambient Temperature	-20°C ~ 80°C

Accessory

Limit switch box, Proximity switch box, Solenoid valve, Air set, Speed controller, Volume booster, Manual handle, etc.

Pneumatic On-Off Ball Valve

Model No. AGE30_S Series

Specification

Body

Type	2-way Ball, 3-way Ball (T-port, L-port)
Size	15A~300A
Pressure Rating	JIS 10K ~ 20K, ANSI 150# ~ 300#
End Connection	FLANGE, SCREW
Materials	Body:Ductile iron, Cast steel, Stainless steel, etc.
	Ball : Stainless steel, etc.
	Seat : PTFE, RTFE, etc.
	Stem : Stainless steel, etc.

Actuator

Actuator type	Multi spring cylinder(rack&pinion gear, scotch yoke)
Operating type	Spring return, double acting
Materials	Housing : Aluminum alloy
	Piston : Die-cast aluminum(101A)
	Cover : Die-cast aluminum(ADC12)
Air Supply	4 - 7kg/cm^2
Air Connection	Rc1/4" , Rc3/8" , Rc1/2"
Ambient Temperature	-20°C ~ 80°C

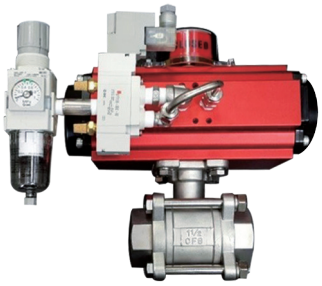

Accessory

Limit switch, Proximity switch, Solenoid valve, Air set, Speed controller, Volume booster, Manual handle.

DIMENSION

VALVE SIZE		L	h	H	W
15A	1/2"	108	48	385	168
20A	3/4"	117	50	400	184
25A	1"	127	63	405	184
32A	1 1/4"	140	68	440	204
40A	1 1/2"	165	70	460	262
50A	2"	178	78	490	268
65A	2 1/2"	190	88	535	301
80A	3"	203	93	570	390
100A	4"	229	105	625	458
125A	5"	356	125	730	525
150A	6"	394	140	810	532
200A	8"	457	165	890	602
250A	10"	533	200	980	722

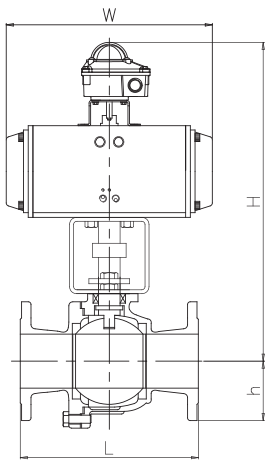

*Dimensions and design are subject to change without notice. Request certified drawings for use in preparing piping layouts.

Pneumatic Step On-Off Butterfly Valve

Model No. AGE32 Series

AGE32 series pneumatic on off control valves provide mechanical step start or close function on AGE30 series to avoid any possible water hammer in water shut off service with standard butterfly or ball valve body. Self step function facilitates and provides safety and long service life. Pause time can easily be set and changed on field.

Specification

Body

Type	2-Off set, 3-Off set type
Size	50A(2")~1800A(72")
Pressure rating	JIS 10K ~ 40K, ANSI 150# ~ 300#, PN10 ~ 25, etc.
End Connection	Wafer, Lug, Flange, etc.
Materials	Ductile iron, Cast steel, Stainless steel, etc.
Gland type	Non adjusting
Packing	Concave PTFE packing with back-up ring & spring
	Asbestos yarn with spring
	Graphite with stainless steel back up ring

Trim

Flow Characteristics	Standard butterfly
Materials	Disc : Stainless steel, etc.
	Seat : Reinforced TFE, Rubber, SUS, etc.
	Stem : Stainless steel, etc.
Seat Leakage	Soft seat : ANSI Class VI
	Metal seat : ANSI Class IV

Actuator

Actuator type	2-Step Double rack & pinion gear 2-Step Single rack Linear swivel
Operating type	Step on/off Double acting, Spring return
Air Supply	4 - 7kg/cm^2
Air Connection	Rc1/4" , Rc3/8" , Rc1/2"
Ambient Temperature	-20°C ~ 80°C
Self Step Adjustment time	0 ~ 10sec (< order made)

Pressure/ Temperature Rating Curve

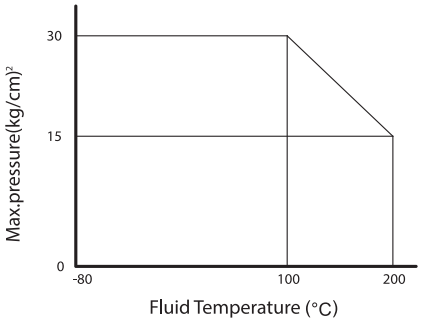

Performance and Operating

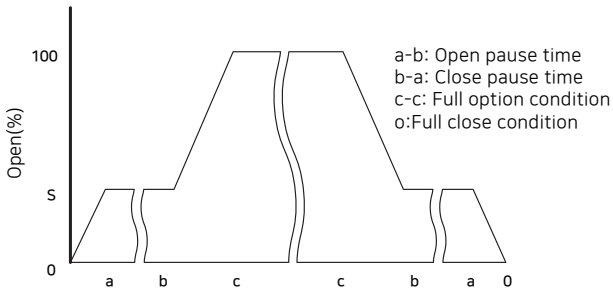

Accessory

Limit switch box, Proximity switch box, Solenoid valve, Air set, Speed controller, Volume booster, Manual handle, etc.

Pneumatic Control Globe Valve

Model No. AGE33 Series

AGE33 series cylinder actuated globe valve provides high shut off differential pressure services, excellent tightness, compact and light weight. Higher thrust force and stiffness than comparable diaphragm actuator offer higher positioning accuracy and repeatability. Unique design of actuator allows simple and easy maintenance.

Specification

Body

Type	2-way globe valve, 3-way globe valve
Size	15A(1/2")~400A(16")
Pressure Rating	JIS 10K ~ 63K, ANSI 150# ~ 900#, PN10 ~ 25, etc.
End Connection	FF, RF, BW, SW
Materials	Ductile iron, Cast steel, Stainless steel, etc.
Gland type	Self adjusting type
Bonnet	Plain bonnet: -17°C ~ 230°C
	Extended bonnet: -45°C ~ -17°C , 230°C ~ 566°C
Packing	Concave PTFE packing with back-up ring & spring
	Asbestos yarn with spring
	Graphite with stainless steel back up ring

Trim

Plug type	Single seated, contoured type plug, pressure balanced plug
Flow Characteristic	Equal Percentage, Linear, Modified Equal Percentage
Materials	Plug : Hard faced SUS304/316/410, etc.
	Seat : Metal : Hard faced SUS304/316/410, etc. Soft : Filled TFE, etc.
	Stem : SUS304/316/410, etc.
Seat Leakage	Metal seat : ANSI Class IV, Soft seat : ANSI Class VI
Rangeability	30:1, 50:1

Actuator

Actuator type	Diaphragm / Multi spring cylinder
Operating type	Direct acting, reverse acting
Materials	Cylinder : AC4C-T6, Die-cast Aluminum / SS41
	Piston : AC4C-T6
	Piston ring : NBR lip ring (commercially available)
	Diaphragm : H-NBR
Air Supply	Diaphragm type : 2 - 4kg/cm^2
	Cylinder type : 4 - 7kg/cm^2
Air Connection	Rc1/4" , Rc3/8" , Rc1/2"
Ambient Temperature	-20°C ~ 80°C

Accessory

Positioner	E/P, P/P, Smart type, etc.
Air Set	Filter + Ragulator, Lubricator, etc.
Manual Handle	Top, Side mounted
Etc.	Lock up valve, volume booster, etc.

Pneumatic Control Butterfly Valve

Model No. AGE33 Series

AGE33 series double rack rotary actuator provides the solutions to high frequency operation, higher speed for specific service, least back lash and torque rating problem. Cast triple guided piston and pin & roller overcome higher torque demand, corrosion resistance and possible mechanical shock caused by considered dynamic torque especially on butterfly valve service.

- Compact and light weight valve body offers low cost and space.
- Double rack design of actuator provides higher torque and travel speed.
- Crescent Disc design provides high rangeability and controllability.

Specification

Body

Type	2-Off set, 3-Off set type
Size	25A(1")~ 1800A(72")
Pressure Rating	JIS 10K ~ 40K, ANSI 150# ~ 300#, PN10 ~ 25, etc.
End Connection	Wafer, Lug, Flange, etc.
Materials	Ductile iron, Cast steel, Stainless steel, etc.
Gland Type	Non adjusting
Packing	Concave PTFE packing with back-up ring & spring
	Asbestos yarn with spring
	Graphite with stainless steel back up ring
Rangeability	15:1, (100:1 order made - Crescent disc type)

Trim

Flow Characteristics	Standard butterfly, Modified Equal Percentage
Materials	Disc : SCS13, SCS14, etc.
	Seat : r-TFE, PTFE, SUS304, etc.
	Shaft : SUS304/316/410, etc.
Seat Leakage	Soft seat : ANSI Class VI
	Metal seat : ANSI Class IV

Actuator

Actuator type	Multi spring cylinder(rack & pinion gear, scotch yoke)
Operating type	Spring return, Double acting
Materials	Housing : Aluminum alloy
	Piston : Die-cast aluminum(101A)
	Cover : Die-cast aluminum(ADC12)
Air Supply	4 - 7kg/cm^2
Air Connection	Rc1/4" , Rc3/8" , Rc1/2"
Ambient Temperature	-20°C ~ 80°C

Accessory

Positioner	E/P, P/P, Smart type, etc.
Air Set	Filter + Ragulator, Lubricator, etc.
Manual Handle	Side mounted, Declutchable gear box
Etc.	Lock up valve, volume booster, etc.

1st Pressure Regulating Valve

Model No. AGE3110 Series

Unique & uncomplicated pneumatic 1st pressure regulating valve provides the solution to upstream pressure control problems. AGE31 series can be used not only globe valve body but also specific quarter turn valves like HP butterfly designed with anti-blowout seat construction. This feature provides extremely low cost in large size services, desirable pump pressure control and convenient selecting/sizing procedure.

Specification

2-WAY GLOBE VALVE

Size	15A(1/2 ″)~400A(16 ″)
Pressure Rating	JIS 10K ~ 63K, ANSI 150# ~ 900#, PN10 ~ 25, etc.
Body Material	Ductile iron, Cast steel, Stainless steel, etc.
Trim Type	Cage guided and contoured type
Bonnet	Plain bonnet: -17 °C ~ 230 °C
	Extended bonnet: -45 °C ~ -17 °C , 230 °C ~ 566 °C
Gland Type	Bolted Gland
Packing	Concave PTFE packing with Stainless Steel back-up ring Graphite with stainless steel back up ring
Flow Characteristics	EQ %, Modified EQ%, Linear
Seat Leakage	Metal seated : ANSI Class IV
	Soft seated : ANSI Class VI
Actuator	Diaphragm / Multi spring cylinder
Operating Type	Air-to-Close, Direct acting
Air Supply	Diaphragm type : 2 - 3kg/cm^2
	Cylinder type : 4 - 7kg/cm^2
Air Connection	Rc1/4 ″ , Rc3/8 ″ , Rc1/2 ″
Ambient Temperature	-20°C ~ 80°C
Accessory	Air set, Volume booster, Manual handle. etc.
Hysteresis	with AGE311 Controller : Within 2% of Set Pressure.
Rangeability	30:1 (60:1 and the higher is made by user’s order).

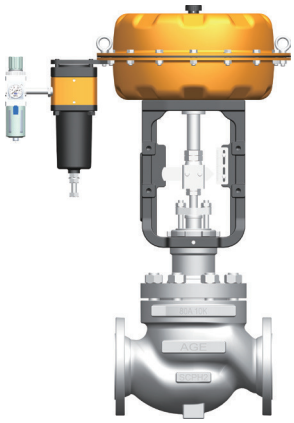

BUTTERFLY VALVE

Size	Size : 25A(1 ″)~1800A(72 ″)
Pressure Rating	IS 10K ~ 40K, ANSI 150# ~ 300#, PN10 ~ 25, etc
Body Material	Wafer, Lug, Flange, etc.
Trim Type	Standard, Crescent Disc type
Gland Type	Non adjusting
Packing	Concave PTFE packing with Stainless Steel back-up ring Graphite with stainless steel back up ring
Flow Characteristics	Standard Butterfly, Modified EQ% (Equal Linear)
Seat Leakage	Metal seated : ANSI Class IV
	Soft seated : ANSI Class VI
Actuator	Double rack & Pinion Gear
Operating Type	Air-to-close
Air Supply	4 - 7kg/cm^2
Air Connection	Rc1/4 ″ , Rc3/8 ″ , Rc1/2 ″
Ambient Temperature	-20°C ~ 80°C
Accessory	Air set, Volume booster, Manual handle. etc.
Hysteresis	with AGE311 Controller : Within 2% of Set Pressure.
Rangeability	15:1 (30:1, 100:1 and the higher is made by user’s

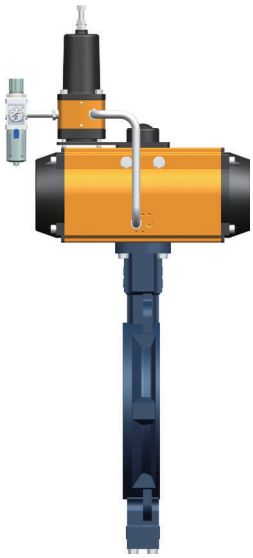

Installation and Hook-up

HP Butterfly Valve

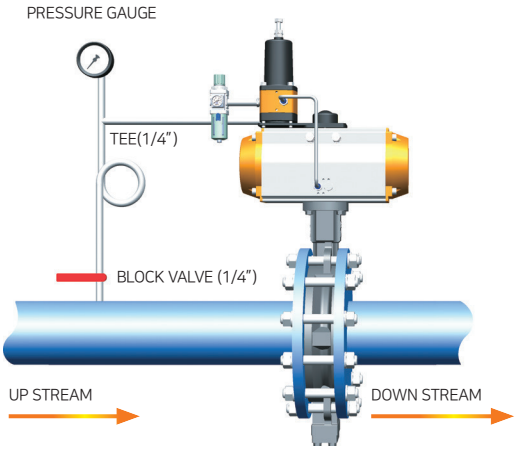

Globe Valve

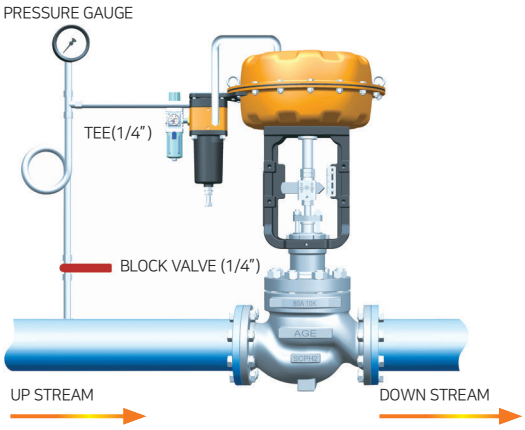

Examples of Installation

① Shut off valve	⑤ Impulse tubing	⑨ Condensate pot	⑬ Control valve
② Control valve	⑥ Pressure indicator	⑩ Safety valve	⑭ Controller(AGE311O)
③ Controller(AGE313C)	⑦ Syphon tube	⑪ Controller(2)	⑮ dP indicator
④ Air supply	⑧ Block valve	⑫ Solenoid valve	⑯ Orifice flange

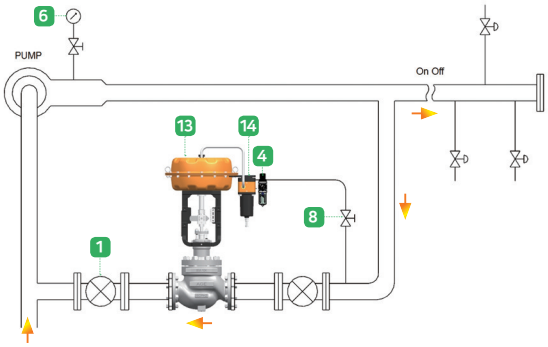

Pump discharge pressure regulating valve

AGE311 regulates pump discharge pressure at any flow rate. Pressure for the AGE311 controller input on pump discharge side or valve upstream side.

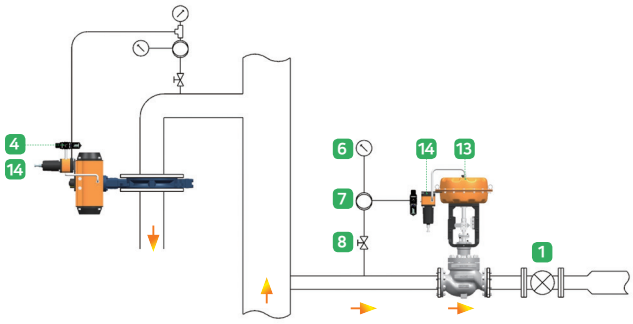

Upstream pressure regulating valve

AGE311 Series satisfies designed pressure on every specified facilities by overflowing valve upstream.
The variation of flow rate doesn' t affect main process pressure. Pressure for AGE311 Series controller input on place at which specified pressure to be constantly regulated.

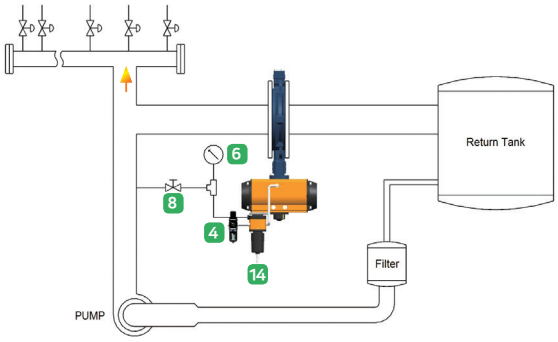

Nozzle pressure regulating valve

AGE311 senses upstream pressure of valve and overflow remains so as to absorb excessive pressure surge problems and not to permit instabilities of pressure on circulation and feed water system. This lengthens duty life of equipment and devices.

2nd Pressure Reducing Valve

Model No. AGE313C Series

AGE313 Series pressure reducing valve provides stability, accuracy and convenient selecting/sizing progress in pressure reducing service. Specific HP butterfly valve body presents low cost in large size service.

Specification

2-WAY GLOBE VALVE

Size	15A(1/2 ″)~400A(16 ″)
Pressure Rating	JIS 10K ~ 63K, ANSI 150# ~ 900#, PN10 ~ 25, etc.
Body Material	Ductile iron, Cast steel, Stainless steel, etc.
Trim Type	Cage guided and contoured type
Bonnet	Plain bonnet: -17 °C ~ 230 °C
	Extended bonnet: -45 °C ~ -17 °C , 230 °C ~ 566 °C
Gland Type	Bolted Gland
Packing	Concave PTFE packing with Stainless Steel back-up ring Graphite with stainless steel back up ring
Flow Characteristics	EQ %, Modified EQ%
Seat Leakage	Metal seated : ANSI Class IV
	Soft seated : ANSI Class VI
Actuator	Diaphragm / Multi spring cylinder
Operating Type	Air-to-Open, Reverse acting
Air Supply	Diaphragm type : 2 - 4kg/cm^2
	Cylinder type : 4 - 7kg/cm^2
Air Connection	Rc1/4 ″ , Rc3/8 ″ , Rc1/2 ″
Ambient Temperature	-20°C ~ 80°C
Accessory	Air set, Volume booster, Manual handle. etc.
Hysteresis	with AGE313 Controller : Within 2% of Set Pressure.
Rangeability	30:1 (60:1 and the higher is made by user's order).

BUTTERFLY VALVE

Size	Size : 25A(1 ″)~1800A(72 ″)
Pressure Rating	IS 10K ~ 40K, ANSI 150# ~ 300#, PN10 ~ 25, etc
Body Material	Wafer, Lug, Flange, etc.
Trim Type	Standard, Crescent Disc type
Gland Type	Non adjusting
Packing	Concave PTFE packing with Stainless Steel back-up ring Graphite with stainless steel back up ring"
Flow Characteristics	Standard Butterfly, EQ %, EQ Linear
Seat Leakage	Metal seated : ANSI Class IV
	Soft seated : ANSI Class VI
Actuator	Double rack & Pinion Gear
Operating Type	Air-to-Open
Air Supply	4 - 7kg/cm^2
Air Connection	Rc1/4 ″ , Rc3/8 ″ , Rc1/2 ″
Ambient Temperature	-20°C ~ 80°C
Accessory	Air set, Volume booster, Manual handle. etc.
Hysteresis	with AGE313 Controller : Within 2% of Set Pressure.
Rangeability	15:1 (30:1, 100:1 and the higher is made by user's

Installation and Hook-up

HP Butterfly Valve

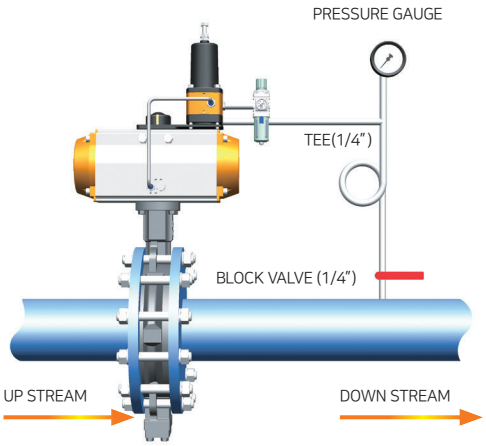

Globe Valve

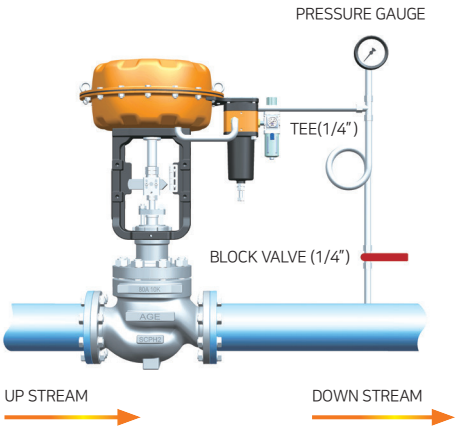

Examples of Installation

① Shut off valve	⑤ Impulse tubing	⑨ Condensate pot	⑬ Control valve
② Control valve	⑥ Pressure indicator	⑩ Safety valve	⑭ Controller(AGE311O)
③ Controller(AGE313C)	⑦ Syphon tube	⑪ Controller(2)	⑮ dP indicator
④ Air supply	⑧ Block valve	⑫ Solenoid valve	⑯ Orifice flange

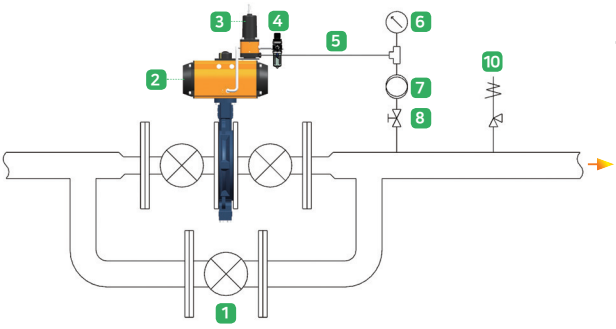

Simple pressure reducing service

AGE313C Series regulate down stream pressure with the independence upon up and downstream fluctuations. Pressure for controller input on downstream side with condensate pot or syphon tube on hot fluid service.

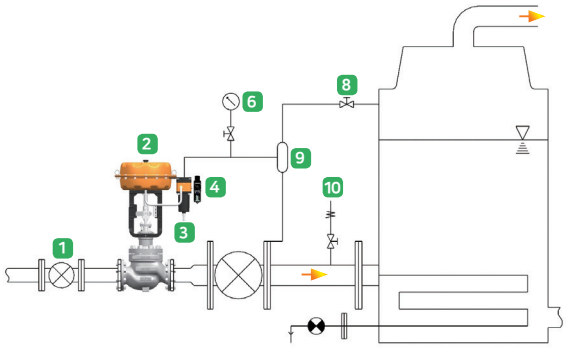

Pressure regulating on vaporizer (Indirect local temperature control)

AGE313C Series PRV regulates steam flow for heating vaporizer. Pressure for the controller input on vaporizer through condensate pot.

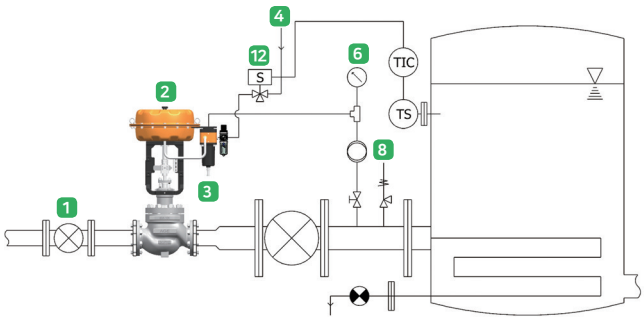

Pressure reducing & PWM PID local temperature control (Manufacturer package supplied)

AGE313C Series control temperature by pulse width PID modulating on off signal from TIC with pressure regulating function.Temperature sensor for TIC input on heat exchanger and for controller input on downstream piping.

Electric On off Valve

Model No. AGE40 Series

AGE40 series are AC/DC motor actuator designed to provide outstanding functions to shut off the rotating and thrust force valves. Long lasted experience in manufacturing various control valve and HP butterfly valve enables us to provide the solution to safe and convenient operating. Inherent built-in self soft on or off acting minimizes the line pressure surge and prevents the possible damages of equipment and piping facilities.

- Wide range output torque (150Nm~3,000Nm standard)
- Compact and robust
- ISO5211 mounting base
- Powder coated aluminum housing
- High stability self-lock and mimimum back lash worm and spur gear training
- Reliable current torque limit stall protection. (Mechanical & Current protection)
- No stick failure of manual operating even after for years automatic operation
- 90 degree rotation, multi-turn and 15~60mm stroke linear
- Various control options for easy field commissioning

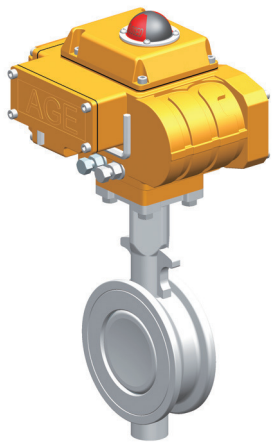

Specification

Body

Type	2-way globe valve, 3-way globe valve (15~300A)
	Concentric, 2-Off set, 3-Off set Butterfly valve (25~1000A)
Pressure Rating	JIS 10K ~ 40K, ANSI 150# ~ 900#, PN10 ~ 25, etc.
End Connection	FLANGE, WAFER
Body Material	Ductile iron, Cast steel, Stainless steel, etc.
Gland type	Bolted Gland(Globe), Non adjusting shaft seal(Rotating)
Bonnet	Plain bonnet: -17 °C ~ 230 °C
	Extended bonnet: -45 °C ~ -17 °C , 230 °C ~ 566 °C
Seat Leakage	Metal seated : ANSI Class IV
	Soft seated : ANSI Class VI

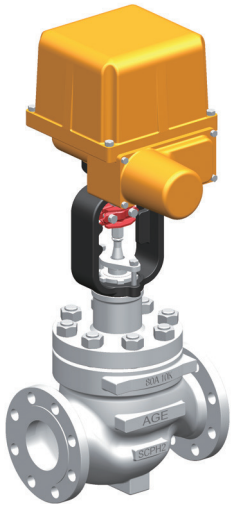

Actuator

Power Supply	110Vac, 220Vac, AC/DC 12, 24V
Input Signal	Dc Motor : Dry contact
	Ac Motor : On off command
Speed	16sec/stroke ~ 58sec/stroke
Power Consumption	15W ~ 200W (>200W are order made)
Ambient Temperature	-20'C ~ 70'C
Enclosure	Weather proof, IP67 (standard)
Cable Entry	PF 1/2 X 2
Accessories	Space heater, Local switch

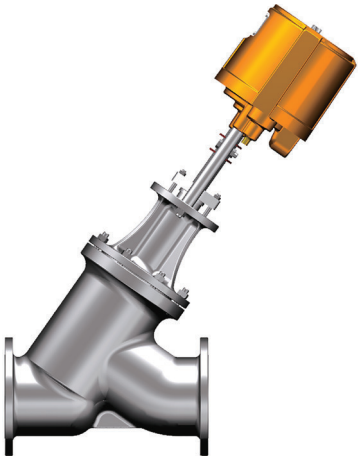

Electric Modulating Valve

Model No. AGE41 Series

AGE41 series Micro-Process based motor operated modulating control valves provide the solution to problems that demand higher accuracy, least hysteresis with smart operating and easy maintenance of control valve. Anti-reset electric overload circuit, noise selecting mode and electric break circuit provide safe and reliable function and duty life. Excellent positioning due to the Smart activity assisted in the unique functions above mentioned and the high torque or force of actuator will satisfy a wide range of applications.

Feature

- Self diagnostics and on-line calibration (AC Smart)
- Self auto tuning function (Smart)
- High resolution (200% min.)
- Least dead band by dynamic reversible torque (DC Modulating)

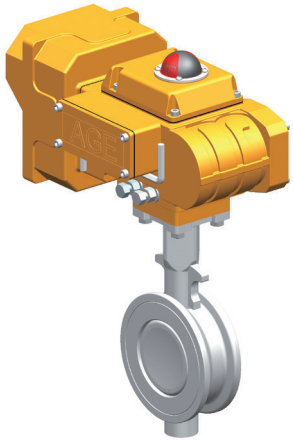

Specification

Body

Type	2-way globe valve, 3-way globe valve (15~300A)
	Concentric, 2-Off set(Crescent Disc), 3-Off set Butterfly valve (25~1000A)
Pressure Rating	JIS 10K ~ 40K, ANSI 150# ~ 900#, PN10 ~ 25, etc.
End Connection	FLANGE, WAFER
Body Material	Ductile iron, Cast steel, Stainless steel, etc.
Gland type	Bolted Gland(Globe), Non adjusting shaft seal(Rotating)
Bonnet	Plain bonnet: -17 °C ~ 230 °C
	Extended bonnet: -45 °C ~ -17 °C , 230 °C ~ 566 °C
Seat Leakage	Metal seated : ANSI Class IV
	Soft seated : ANSI Class VI
Flow Characteristics	Globe Valve : EQ %, Modified EQ%, Linear
	HP Butterlfy : Standard butterfly, Modified EQ%(EQ Linear)
Trim Type	Contoured plug, Parabolic cage (Globe valve)

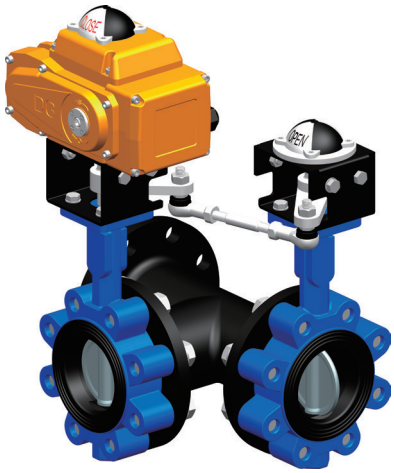

Actuator

Power Supply	110Vac, 220Vac, AC/DC 12, 24V
Input Signal	4-20mA, 1~5V
Speed	16sec/stroke ~ 58sec/stroke
Power Consumption	15W ~ 200W (>200W are order made)
Ambient Temperature	-20'C ~ 70'C
Enclosure	Weather proof, IP67 (standard)
Cable Entry	PF 1/2 X 2
Accessories	Space heater, Local switch

Globe Valve Technical Data

Cv Value and Stroke

Body Size	Port Size	Cv		Stroke	Size	Cv		Stroke
		EQ%	Linear	(mm)		EQ%	Linear	(mm)
15A	8	0.96	-	16	32A	20	25	16
	10	2.5	-	16	40A	30	35	25
	15	4	-	16	50A	46	55	25
20A	8	0.96	-	16	65A	75	85	40
	10	2.5	-	16	80A	110	135	40
	15	4	-	16	100A	185	210	40
	20	8	10	16	125A	280	310	60
25A	8	0.96	-	16	150A	365	425	60
	10	2.5	-	16	200A	650	700	60
	15	4	-	16	250A	960	1050	100
	20	8	10	16	300A	1300	1500	100
	25	13	16	16				

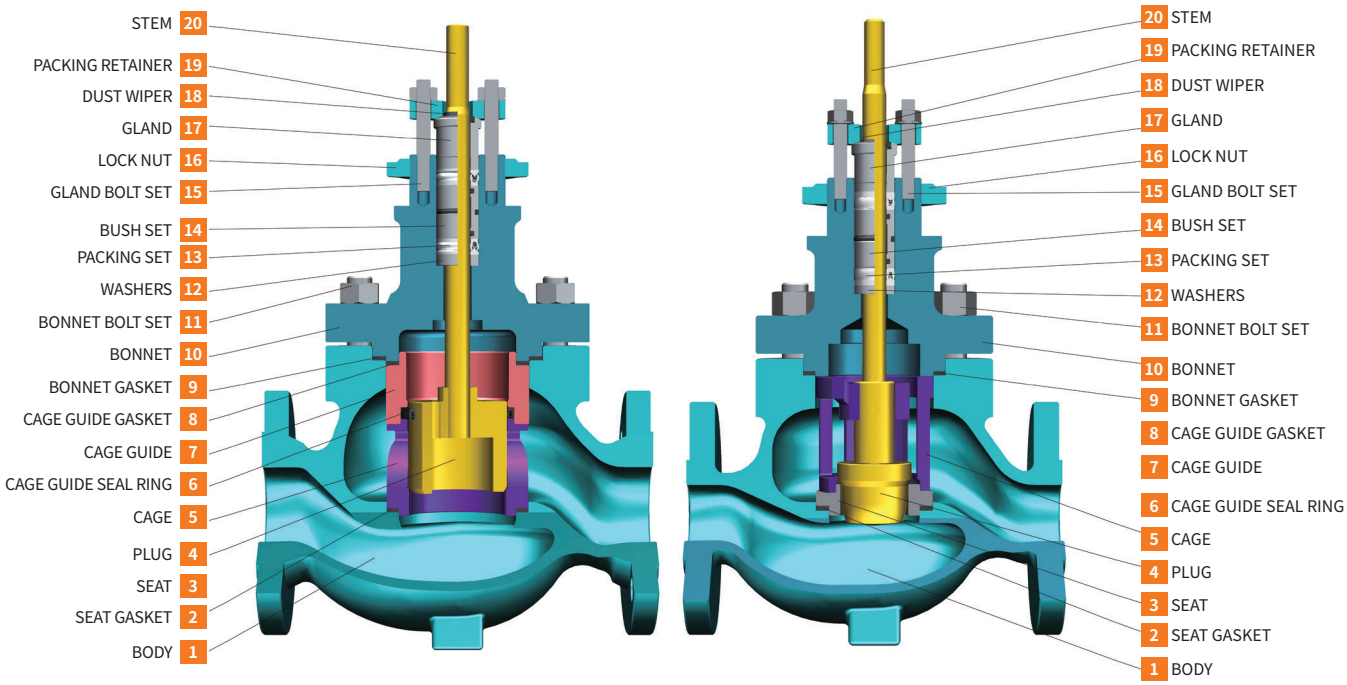

No.	Part Name	Material	Q'ty
1	BODY	SCPH2/FCD450/SCS13	1
2	SEAT GASKET	SUS304+GRAPHITE	1
3	SEAT	SUS304	1
4	PLUG	SUS304/SUS410	1
5	CAGE	SCPH2/SUS304	1
6	CAGE GUIDE SEAL RING	RTFE+SUS304	1
7	CAGE GUIDE	SCPH2/SUS304	1
8	CAGE GUIDE GASKET	SUS304+GRAPHITE	1
9	BONNET GASKET	SUS304+GRAPHITE	1
10	BONNET	SCPH2	1

No.	Part Name	Material	Q'ty
11	BONNET BOLT SET	A193 B7/A194 2H	8
12	WASHERS	SUS304	2
13	PACKING SET	RTFE	2
14	BUSH SET	SUS304+NBR/BC2+NBR	1
15	GLAND BOLT SET	A193 B7/A194 2H	2
16	LOCK NUT	A351 CF8	1
17	GLAND	SUS304/SS400	1
18	DUST WIPER	NBR	1
19	PACKING RETAINER	SCPH2/SS400	1
20	STEM	SUS304	1

Globe Valve Technical Data

Flow Characteristics

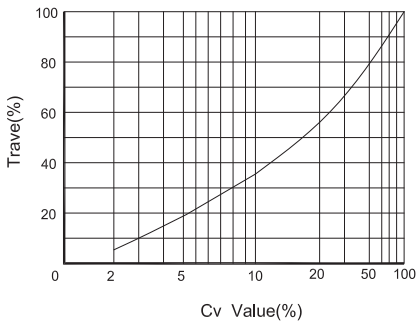

Operating Temperature and Pressure drop Ratings

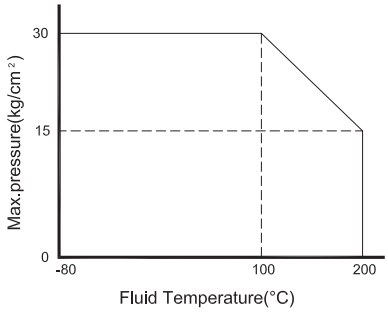

[Soft Seat]

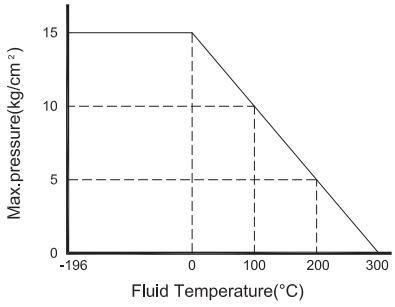

[Metal Seat]

Body Material - Pressure & Temperature Ratings

Temperature	Ductile Iron		Carbon Steel			304 Stainless Steel		
˚C	150#	300#	150#	300#	600#	150#	300#	600#
-29~38 -6~38(D.I)	17	44	19.6	51.1	102.1	19	49.6	99.3
50	16	41	19.2	50.1	100.2	18.3	47.8	95.6
100			17.7	46.6	93.2	15.7	40.9	81.7
150	15	39	15.8	45.1	90.2	14.2	37	74
200	14	36	13.8	43.8	87.6	13.2	34.5	69
250	11	34	12.1	41.9	83.9	12.1	32.5	65
300	9	32	10.2	39.8	79.6	10.2	30.9	61.8

* Ductile Iron : ASME B16.42 / * Carbon Steel, Stainless Steel : ASME B16.34

3-WAY GLOBE FLOW DIRECTION

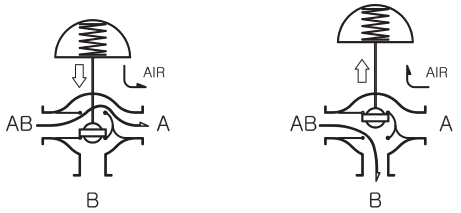

FLOW-1

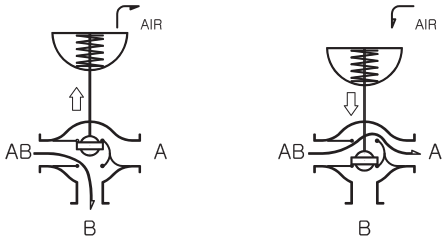

FLOW-2

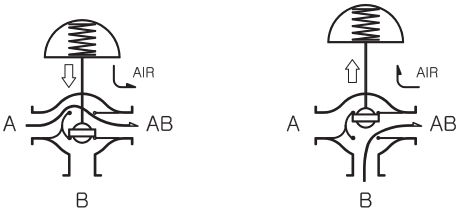

FLOW-3

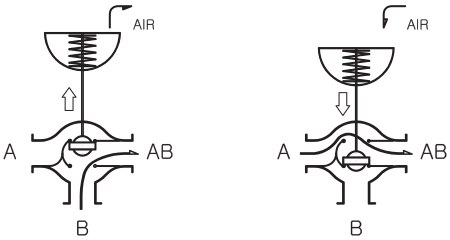

FLOW-4

VALVE TYPE	DIVERTING TYPE		MIXING TYPE	
	Reverse acting	Direct acting	Reverse acting	Direct acting
DIRECTION	FLOW-1	FLOW-2	FLOW-3	FLOW-4
input 4mA	AB → A	AB → B	A → AB	B → AB
input 20mA	AB → B	AB → A	B → AB	A → AB

Globe Valve Technical Data

DIAPHRAGM ACTUATED GLOBE VALVE ASSEMBLY

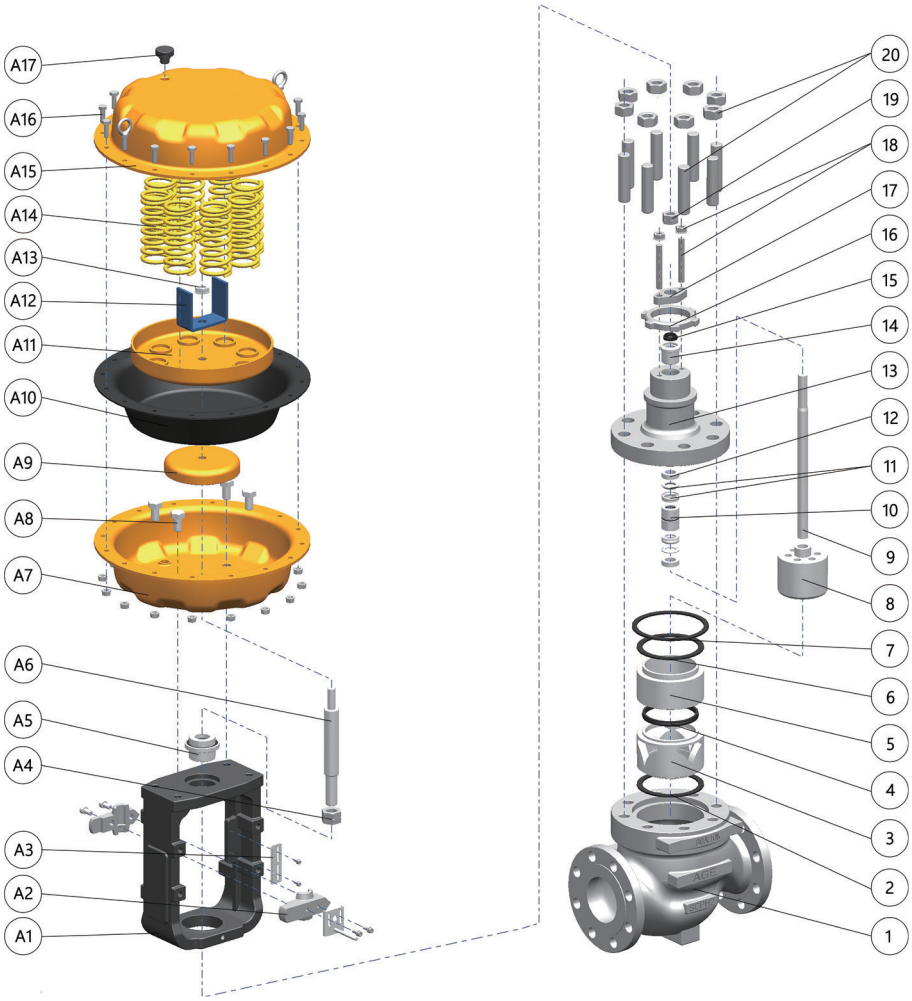

VALVE BODY

No.	Part Name	Material	Q'ty
1	BODY	SCPH2/FCD450/SCS13	1
2	SEAT GASKET	SUS304+GRAPHITE	1
3	CAGE	SCPH2/SUS304	1
4	CAGE GUIDE SEAL RING	RTFE+SUS304	1
5	CAGE GUIDE	SCPH2/SUS304	1
6	CAGE GUIDE GASKET	SUS304+GRAPHITE	1
7	BONNET GASKET	SUS304+GRAPHITE	1
8	PLUG	SUS304/SUS410	1
9	STEM	SUS304	1
10	BUSH SET	SUS304+NBR/BC2+NBR	1

No.	Part Name	Material	Q'ty
11	PACKING SET	RTFE	2
12	WASHERS	SUS304	2
13	BONNET	SCPH2/FCD450/SCS13	1
14	GLAND	SUS304/SS400	1
15	DUST WIPER	NBR	1
16	LOCK NUT	A351 CF8	1
17	PACKING RETAINER	SCPH2/SS400	1
18	GLAND BOLT SET	A193 B7/A194 2H	2
19	STEM NUT	A194 2H	2
20	BONNET BOLT SET	A193 B7/A194 2H	8

DIAPHRAGM ACTUATOR

No.	Part Name	Material	Q'ty
A1	YOKE	FCD450/SCPH2	1
A2	SPINDLE CLAMP	SS400/A351 CF8	1
A3	INDICATOR SCALE	SUS304	1
A4	SPINDLE NUT	A194 2H	2
A5	YOKE BUSH SET	SUS304+NBR	1
A6	SPINDLE	SUS304	1
A7	LOWER COVER	AC4C/SS400	1
A8	LOWER COVER BOLT	A193 B7	4
A9	DIAPHRAGM BASE	SS400	1

No.	Part Name	Material	Q'ty
A10	DIAPHRAGM	EPDM/NBR	1
A11	SPRING BASE	SS400	1
A12	STOPPER	SS400	1
A13	STOPPER NUT	A194 2H	2
A14	SPRING	SPS	8
A15	UPPER COVER	SS400	1
A16	COVER BOLT	A193 B7/A194 2H	16
A17	VENT CAP	ABS	1

Globe Valve Technical Data

CYLINDER ACTUATED GLOBE VALVE ASSEMBLY

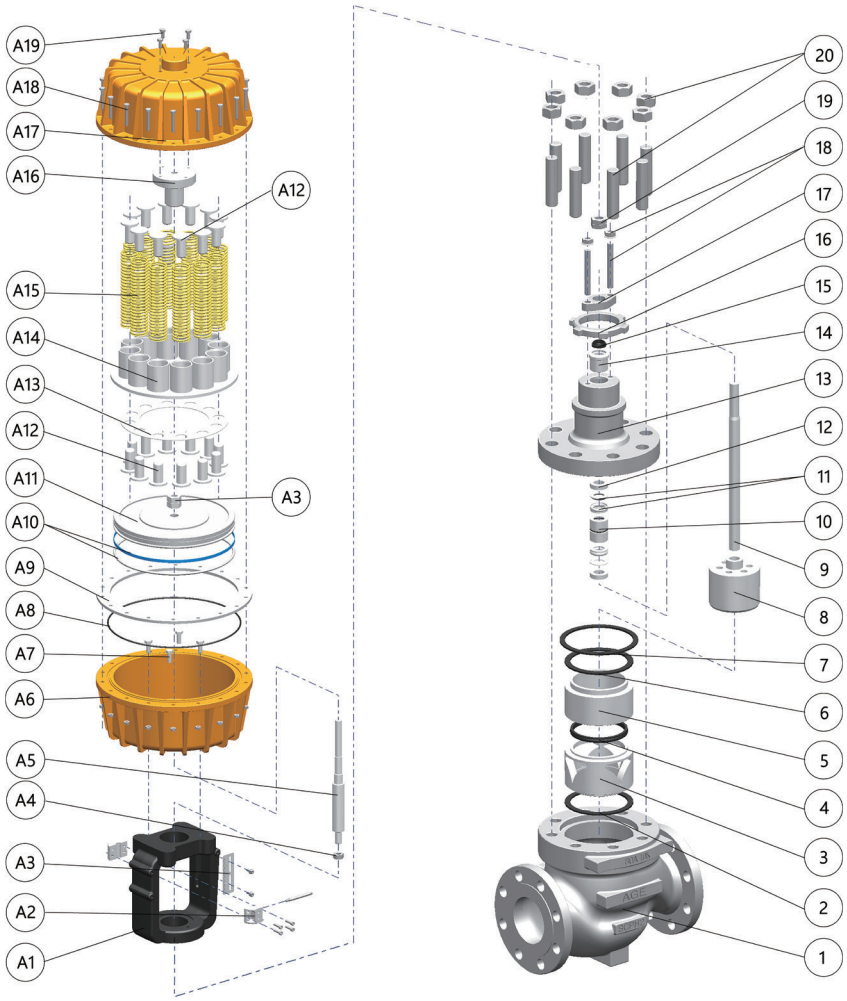

VALVE BODY

No.	Part Name	Material	Q'ty
1	BODY	SCPH2/FCD450/SCS13	1
2	SEAT GASKET	SUS304+GRAPHITE	1
3	CAGE	SCPH2/SUS304	1
4	CAGE GUIDE SEAL RING	RTFE+SUS304	1
5	CAGE GUIDE	SCPH2/SUS304	1
6	CAGE GUIDE GASKET	SUS304+GRAPHITE	1
7	BONNET GASKET	SUS304+GRAPHITE	1
8	PLUG	SUS304/SUS410	1
9	STEM	SUS304	1
10	BUSH SET	SUS304+NBR/BC2+NBR	1

No.	Part Name	Material	Q'ty
11	PACKING SET	RTFE	2
12	WASHERS	SUS304	2
13	BONNET	SCPH2/FCD450/SCS13	1
14	GLAND	SUS304/SS400	1
15	DUST WIPER	NBR	1
16	LOCK NUT	A351 CF8	1
17	PACKING RETAINER	SCPH2/SS400	1
18	GLAND BOLT SET	A193 B7/A194 2H	2
19	STEM NUT	A194 2H	2
20	BONNET BOLT SET	A193 B7/A194 2H	8

CYLINDER ACTUATOR

No.	Part Name	Material	Q'ty
A1	YOKE	FCD450/SCPH2	1
A2	SPINDLE CLAMP	SS400/A351 CF8	1
A3	INDICATOR SCALE	SUS304	1
A4	SPINDLE NUT	A194 2H	3
A5	SPINDLE	SS400/SUS304	1
A6	LOWER COVER	AC4C/SS400	1
A7	LOWER COVER BOLT	A193 B7	4
A8	LOWER COVER O-RING	NBR	1
A9	SPACER	SS400	1
A10	PISTON O-RING SET	NBR	1

No.	Part Name	Material	Q'ty
A11	PISTON	SS400/AC4C	1
A12	SPRING HOLDER	SS400	N
A13	SPRING BASE	SS400	2
A14	SPRING GUIDE SET	SS400	1
A15	SPRING	SPS	N
A16	SPINDLE GUIDE	SS400	1
A17	UPPER COVER	AC4C/SS400	1
A18	COVER BOLT	A193 B7	18
A19	UPPER COVER BOLT	A193 B7	4

Butterfly Valve Technical Data

Flow Characteristics

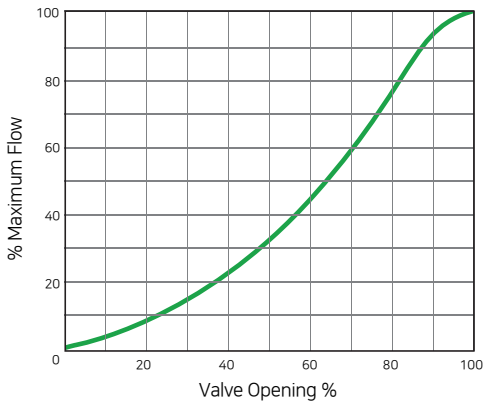

Seat Pressure & Temperature Ratings

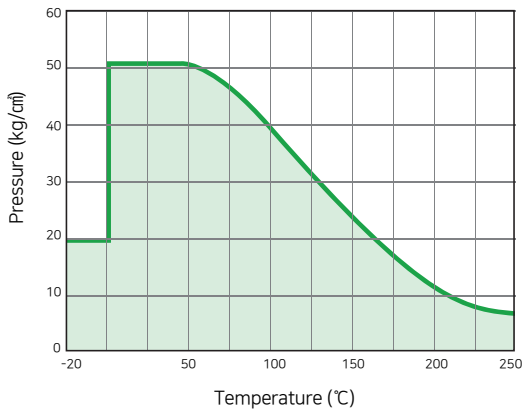

Cv Value

Opening \ Size(mm)	50A	65A	80A	100A	125A	150A	200A	250A	300A	350A	400A	450A	500A	550A	600A
20%	7	13	21	38	62	90	169	268	384	552	720	944	955	998	1040
30%	12	22	36	67	108	158	295	470	670	966	1260	1650	1800	2050	2200
40%	19	35	57	105	169	248	464	737	1060	1520	1980	2600	2800	3200	3700
50%	29	54	88	161	262	383	717	1140	1630	2350	3060	4012	4300	5000	5700
60%	41	77	125	228	370	540	1012	1610	2300	3312	4320	5660	5870	6200	7500
100%	85	160	260	475	770	1125	2110	3350	4800	6900	9000	11800	14600	17300	23000

Self-Energizing Flexible & Anti-Blowout Seat Ring

1. Seat Ring Neck
2. Pressure Energezed
3. Disc Head
4. Body Seat
5. Back Up Ring
6. Disc Seat Retainer

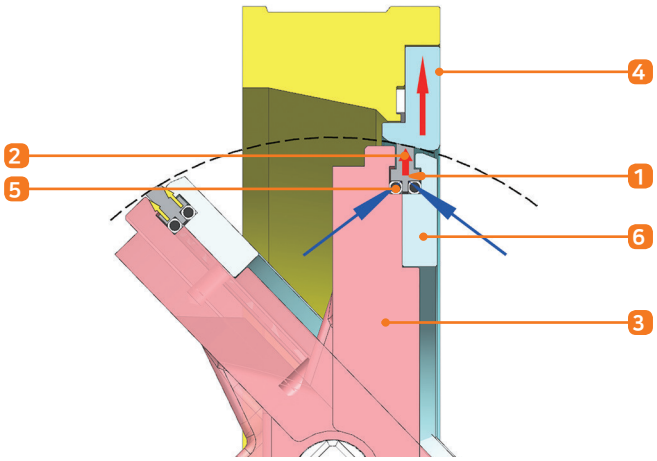

Unique design allows AGE33 series Substitute butterfly valve for globe and gate valve on medium low pressure saturated steam line. Soft seat with self-engrgizing feature provides time-proven tight shut off.

Butterfly Valve Technical Data

PNEUAMTIC HP BUTTERFLY VALVE ASSEMBLY

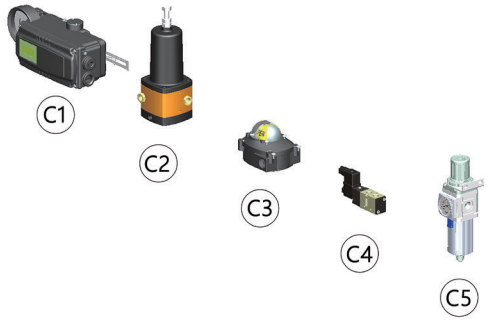

No.	Part Name
C1	POSITIONER
C2	CONTROLLER
C3	LIMIT SWITCH BOX
C4	SOLENOID VALVE
C5	AIR SET

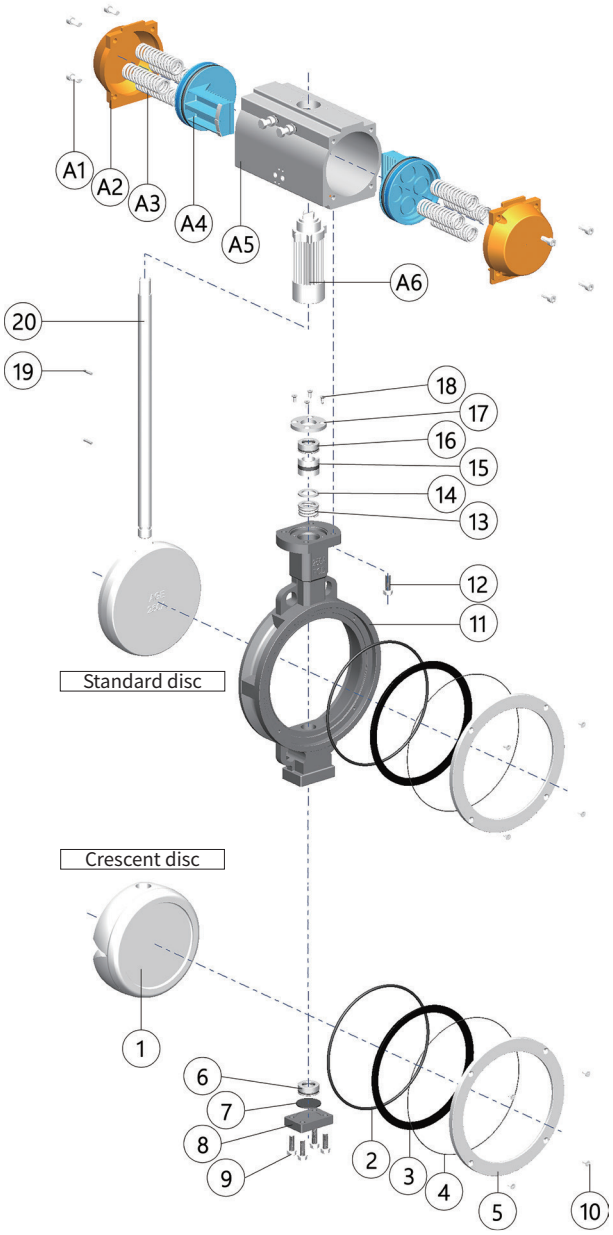

No.	Part Name	Material	Q'ty
A1	END-CAP SCREW	SUS304	8
A2	END-CAP	ADC12	2
A3	SPRING	SPS	0~12
A4	PISTOM	A6061	2
A5	BODY	A6061	1
A6	PINION	#45	1

No.	Part Name	Material	Q'ty
1	DISC	SCS13	1
2	SEAT O-RING	NBR	1
3	SEAT	RTFE	1
4	BODY GASKET	PTFE	1
5	BODY SEAT RETAINER	SCS13	1
6	BOTTOM BUSH SET	PCB2/NBR	1
7	BOTTOM GASKET	C4430	1
8	BOTTOM COVER	SS400/SUS304	1
9	BOTTOM BOLT	A193 B7	1
10	BODY SEAT RETAINER BOLT	A193 B7	1
11	BODY	FCD450/SCS13/SCPH2	2
12	MOUNT BOLT	A193 B7	2
13	SPRING	SPS	1
14	WASHER	SUS304	1
15	PACKING SET	PTFE	1
16	PACKING BUSH SET	ACETAL/PCB2/NBR	1
17	PACKING RETAINER	SS400/SUS304	1
18	PACKING RETAINER BOLT	A193 B7	2
19	PIN	SUS304	2
20	SHAFT	SUS304	8

Technical Data

Vapor flowrate per pipe size according to velocity (kg/hr)

SCH 40

Pressure Kg/cm2	Velocity m/sec	Pipe size (mm), SCH 40																	
		15	20	25	32	40	50	65	80	100	125	150	200	250	300	350	400	450	500
0.4	15	9	16	25	43	58	96	149	210	360	552	785	1,375	2,130	3,054	3,826	4,996	6,322	7,857
	25	15	26	42	72	97	159	249	350	600	919	1,308	2,292	3,551	5,091	6,376	8,327	10,537	13,095
	40	24	42	68	116	156	255	399	560	961	1,471	2,093	3,668	5,681	8,145	10,202	13,323	16,860	20,953
1	15	12	22	35	60	80	131	205	288	494	757	1,077	1,887	2,923	4,191	5,249	6,855	8,675	10,780
	25	20	36	58	99	134	219	342	480	824	1,261	1,794	3,145	4,872	6,984	8,748	11,425	14,458	17,967
	40	33	58	93	159	214	350	547	768	1,318	2,018	2,871	5,032	7,795	11,175	13,997	18,279	23,132	28,748
2	15	18	32	51	88	118	193	302	424	727	1,113	1,584	2,776	4,300	6,164	7,721	10,083	12,760	15,857
	25	30	53	86	146	197	322	503	706	1,212	1,855	2,640	4,626	7,166	10,274	12,868	16,805	21,266	26,428
	40	48	85	137	233	314	514	804	1,130	1,938	2,969	4,223	7,402	11,466	16,438	20,589	26,887	34,025	42,286
3	15	24	42	67	114	154	252	394	554	950	1,455	2,070	3,628	5,621	8,058	10,093	13,181	16,680	20,730
	25	39	69	112	191	257	420	657	923	1,584	2,426	3,451	6,047	9,368	13,430	16,822	21,968	27,801	34,549
	40	63	111	179	305	411	672	1,052	1,477	2,534	3,881	5,521	9,676	14,989	21,489	26,915	35,149	44,481	55,279
4	15	29	51	82	140	189	309	483	678	1,163	1,782	2,534	4,442	6,881	9,864	12,355	16,135	20,419	25,376
	25	48	85	137	233	314	515	805	1,130	1,939	2,969	4,224	7,403	11,468	16,440	20,592	26,892	34,031	42,293
	40	77	136	219	374	503	823	1,287	1,808	3,102	4,751	6,758	11,845	18,348	26,305	32,947	43,027	54,450	67,668
5	15	34	61	98	167	225	368	576	809	1,388	2,126	3,024	5,300	8,211	11,771	14,744	19,254	24,366	30,281
	25	57	101	164	279	375	614	960	1,348	2,314	3,543	5,041	8,834	13,684	19,618	24,573	32,090	40,609	50,468
	40	92	162	262	446	600	982	1,536	2,157	3,702	5,669	8,065	14,134	21,895	31,389	39,316	51,344	64,975	80,749
6	15	40	70	113	193	259	424	663	932	1,599	2,448	3,483	6,104	9,456	13,556	16,980	22,174	28,061	34,873
	25	66	117	188	321	432	707	1,106	1,553	2,664	4,081	5,805	10,174	15,760	22,594	28,299	36,957	46,768	58,122
	40	106	187	301	513	691	1,131	1,769	2,485	4,263	6,529	9,288	16,278	25,215	36,150	45,279	59,131	74,829	92,995
7	15	45	80	129	219	295	483	755	1,061	1,820	2,788	3,966	6,950	10,767	15,436	19,334	25,248	31,951	39,708
	25	75	133	214	365	492	805	1,259	1,768	3,034	4,646	6,610	11,584	17,945	25,726	32,223	42,081	53,252	66,180
	40	120	212	343	585	787	1,288	2,014	2,829	4,854	7,434	10,576	18,534	28,711	41,162	51,556	67,329	85,203	105,887
8	15	50	89	144	245	330	540	845	1,186	2,036	3,118	4,435	7,773	12,041	17,262	21,622	28,236	35,733	44,407
	25	84	148	240	409	550	900	1,408	1,977	3,393	5,196	7,392	12,955	20,068	28,771	36,036	47,061	59,554	74,012
	40	134	238	384	654	880	1,441	2,253	3,164	5,429	8,314	11,827	20,728	32,109	46,033	57,658	75,297	95,287	118,419
10	15	61	108	174	297	400	654	1,023	1,437	2,465	3,776	5,372	9,414	14,583	20,907	26,186	34,198	43,276	53,782
	25	102	180	290	495	666	1,090	1,705	2,395	4,109	6,293	8,953	15,690	24,305	34,845	43,644	56,996	72,127	89,637
	40	163	288	465	792	1,066	1,745	2,728	3,832	6,575	10,069	14,324	25,104	38,888	55,751	69,830	91,193	115,403	143,419
12	15	72	126	204	348	469	767	1,199	1,684	2,889	4,425	6,295	11,032	17,089	24,500	30,687	40,075	50,714	63,026
	25	119	211	340	580	781	1,278	1,998	2,807	4,815	7,375	10,491	18,387	28,482	40,833	51,145	66,792	84,524	105,043
	40	191	337	545	928	1,250	2,045	3,197	4,491	7,705	11,799	16,786	29,418	45,572	65,333	81,832	106,867	135,238	168,069
14	15	82	145	234	399	538	880	1,376	1,933	3,317	5,080	7,226	12,664	19,618	28,126	35,228	46,006	58,219	72,352
	25	137	242	391	666	897	1,467	2,294	3,222	5,528	8,466	12,044	21,107	32,697	46,876	58,714	76,676	97,032	120,587
	40	219	387	625	1,065	1,435	2,347	3,670	5,155	8,845	13,546	19,270	33,772	52,316	75,002	93,942	122,682	155,251	192,940
16	15	93	164	265	451	607	993	1,553	2,181	3,742	5,731	8,152	14,288	22,133	31,730	39,743	51,902	65,681	81,625
	25	154	273	441	751	1,012	1,655	2,588	3,635	6,236	9,551	13,587	23,813	36,888	52,884	66,239	86,503	109,468	136,042
	40	247	437	705	1,202	1,618	2,648	4,141	5,816	9,978	15,282	21,740	38,100	59,020	84,614	105,982	138,405	175,148	217,667
18	15	104	183	296	504	679	1,111	1,737	2,440	4,187	6,412	9,121	15,986	24,763	35,502	44,467	58,071	73,488	91,328
	25	173	305	493	840	1,132	1,852	2,896	4,067	6,978	10,686	15,202	26,643	41,272	59,170	74,112	96,785	122,480	152,213
	40	277	489	789	1,344	1,811	2,963	4,633	6,507	11,164	17,098	24,324	42,629	66,036	94,672	118,580	154,857	195,968	243,541
20	15	114	201	325	554	746	1,220	1,908	2,680	4,599	7,043	10,019	17,560	27,201	38,997	48,845	63,788	80,722	100,319
	25	190	335	542	923	1,243	2,034	3,181	4,467	7,665	11,738	16,699	29,266	45,336	64,995	81,408	106,314	134,537	167,198
	40	304	537	867	1,477	1,989	3,254	5,089	7,148	12,263	18,781	26,719	46,826	72,537	103,992	130,254	170,102	215,260	267,517

Technical Data

SCH 80

Pressure Kg/cm2	Velocity m/sec	Pipe size (mm), SCH 80																	
		15	20	25	32	40	50	65	80	100	125	150	200	250	300	350	400	450	500
0.4	15	7	13	22	37	51	84	134	188	325	502	706	1,254	1,936	2,770	3,472	4,550	5,774	7,144
	25	12	22	36	62	85	141	223	313	541	837	1,176	2,090	3,227	4,617	5,786	7,584	9,624	11,907
	40	19	35	57	99	135	225	356	501	865	1,339	1,882	3,345	5,164	7,387	9,258	12,134	15,398	19,051
1	15	10	18	30	51	70	116	183	258	445	689	968	1,721	2,657	3,801	4,763	6,243	7,922	9,802
	25	16	30	49	85	116	193	305	430	742	1,148	1,614	2,868	4,428	6,334	7,939	10,405	13,204	16,336
	40	26	47	79	136	186	309	489	688	1,187	1,838	2,582	4,589	7,085	10,135	12,702	16,648	21,127	26,138
2	15	14	26	43	75	102	170	270	379	655	1,014	1,424	2,531	3,908	5,590	7,006	9,183	11,653	14,418
	25	24	44	72	125	171	284	449	632	1,091	1,689	2,374	4,219	6,513	9,317	11,677	15,305	19,422	24,030
	40	38	70	116	200	273	454	719	1,012	1,746	2,703	3,798	6,750	10,421	14,908	18,684	24,488	31,076	38,447
3	15	19	34	57	98	134	222	352	496	856	1,325	1,862	3,309	5,109	7,308	9,159	12,005	15,234	18,848
	25	31	57	95	164	223	371	587	826	1,427	2,208	3,103	5,515	8,515	12,181	15,265	20,008	25,390	31,414
	40	50	91	151	262	357	593	940	1,322	2,283	3,533	4,965	8,824	13,624	19,489	24,425	32,012	40,625	50,262
4	15	23	42	69	120	164	272	431	607	1,048	1,622	2,279	4,051	6,254	8,946	11,212	14,695	18,648	23,072
	25	38	70	116	201	273	454	719	1,012	1,747	2,703	3,799	6,751	10,423	14,910	18,687	24,492	31,081	38,454
	40	61	112	185	321	437	726	1,150	1,619	2,795	4,325	6,078	10,802	16,677	23,857	29,899	39,187	49,729	61,526
5	15	27	50	83	144	196	325	515	724	1,251	1,936	2,720	4,834	7,463	10,676	13,379	17,536	22,253	27,532
	25	45	83	138	239	326	542	858	1,207	2,084	3 226	4,533	8,056	12,438	17,793	22,299	29,226	37,089	45,887
	40	72	133	221	383	522	867	1,373	1,932	3,335	5,162	7,253	12,890	19,901	28,468	35,678	46,762	59,342	73,419
6	15	31	57	95	165	225	374	593	834	1,440	2 229	3,132	5,567	8,595	12,295	15,408	20,195	25,628	31,708
	25	52	96	159	276	375	624	988	1,390	2,400	3,715	5,221	9,278	14,324	20,491	25,681	33,658	42,714	52,846
	40	83	153	255	441	601	998	1,581	2,225	3,841	5,944	8,353	14,845	22,919	32,786	41,089	53,854	68,342	84,554
7	15	36	65	109	188	256	426	675	950	1.640	2,538	3,567	6,339	9,786	13,999	17,545	22,995	29,181	36,104
	25	59	109	181	314	427	710	1,125	1,583	2.733	4,230	5,945	10,564	16,310	23,332	29,241	38,325	48,635	60,173
	40	95	175	290	502	684	1,136	1,800	2,533	4,373	6,768	9,511	16,903	26,096	37,331	46,786	61,320	77,817	96,276
8	15	40	73	122	211	287	477	755	1,062	1,834	2,839	3,989	7,089	10,944	15,656	19,621	25,716	32,635	40,376
	25	66	122	203	351	478	794	1,258	1,771	3,057	4,731	6,648	11,815	18,241	26,093	32,702	42,860	54,391	67,294
	40	106	195	324	561	765	1,271	2,013	2,833	4,891	7,569	10,637	18,903	29,185	41,749	52,323	68,577	87,026	107,671
10	15	48	89	147	255	347	577	914	1,287	2,221	3,438	4,831	8,585	13,255	18,961	23,763	31,145	39,524	48,900
	25	80	148	245	425	579	962	1,524	2,144	3,702	5,730	8,052	14,309	22,091	31,602	39,605	51,909	65,874	81,501
	40	128	236	393	680	926	1,539	2,438	3,431	5,923	9,167	12,882	22,894	35,346	50,563	63,369	83,054	105398	130,401
12	15	56	104	173	299	407	676	1,072	1,508	2,603	4,029	5,661	10,061	15,533	22,220	27,848	36,498	46,318	57,305
	25	94	173	288	498	678	1,127	1,786	2,513	4,338	6,714	9,435	16,768	25,888	37,033	46,413	60,831	77,196	95,509
	40	151	277	460	797	1,086	1,804	2,857	4,021	6,941	10,743	15,097	26,829	41,421	59,253	74,260	97,329	123,514	152,814
14	15	65	119	198	343	467	777	1,230	1,731	2,988	4,625	6,499	11,550	17,832	25,508	31,968	41,899	53,172	65,785
	25	108	199	330	572	779	1,294	2,050	2,885	4,980	7,708	10,832	19,250	29,719	42,514	53,281	69,832	88,620	109,642
	40	173	318	528	915	1,246	2,071	3,280	4,615	7,968	12,333	17,331	30,799	47,551	68,022	85,249	111,732	141791	175,427
16	15	73	135	223	387	527	876	1,388	1,953	3,371	5,218	7,332	13,030	20,117	28,777	36,066	47,269	59986	74,216
	25	122	224	372	645	879	1,460	2,313	3,254	5,618	8,696	12,220	21,717	33,528	47,962	60,109	78,782	99,977	123,694
	40	195	359	596	1,032	1,406	2,336	3,701	5,207	8,990	13,913	19,552	34,747	53,645	76,740	96,175	126,052	159,964	197,910
18	15	82	151	250	433	590	980	1,553	2,185	3,772	5,838	8,203	14,579	22,508	32,198	40,353	52,888	67,117	83,038
	25	136	251	417	722	983	1,634	2,588	3,641	6,286	9,730	13,672	24,298	37,514	53,663	67,254	88,147	111,861	138,397
	40	218	401	667	1,155	1,573	2,614	4,141	5,826	10,058	15,567	21,876	38,877	60,022	85,862	107,607	141035	178,978	221,436
20	15	90	165	275	476	648	1,077	1,706	2,400	4,143	6,412	9,011	16,014	24,724	35,368	44,325	58,095	73,724	91,213
	25	150	276	458	793	1,080	1,795	2,843	4,000	6,905	10,687	15,018	26,690	41,207	58,946	73,875	96,825	122,874	152,022
	40	240	441	732	1,268	1,728	2,871	4,548	6,400	11,048	17,100	24,029	42,704	65,931	94,314	118,201	154,920	196,598	243,235

Technical Data

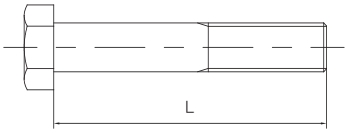

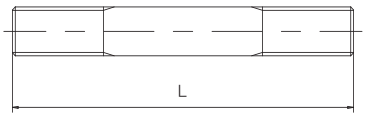

Piping Bolt Selection (for Butterfly Valve)

VALVE SIZE		Face to Face	BOLT SIZE	JIS 10K WAFER			BOLT SIZE	JIS 20K WAFER		
				Q'TY	LENGTH (L)			Q'TY	LENGTH (L)	
mm	inch				MACHINE	STUD			MACHINE	STUD
25A	1"	42	M16	4	105	130	M16	4	110	135
40A	1.5"	42	M16	4	105	135	M16	4	110	140
50A	2"	44	M16	4	110	135	M16	8	115	140
65A	2.5"	44	M16	4	115	140	M16	8	120	145
80A	3"	46	M16	8	115	140	M20	8	125	155
100A	4"	52	M16	8	120	150	M20	8	135	165
125A	5"	56	M20	8	130	160	M22	8	145	180
		62	M20	8	140	170	M22	8	150	185
150A	6"	56	M20	8	135	165	M22	12	150	180
		62	M20	8	140	170	M22	12	155	190
200A	8"	64	M20	12	145	175	M22	12	165	195
		84	M20	12	165	195	M22	12	185	215
250A	10"	68	M22	12	155	190	M24	12	175	210
		91	M22	12	180	210	M24	12	200	235
300A	12"	78	M22	16	165	200	M24	16	190	225
		101	M22	16	190	220	M24	16	215	250
350A	14"	78	M22	16	170	200	M30	16	205	240
		114	M22	16	205	240	M30	16	240	280
400A	16"	102	M24	16	205	245	M30	16	245	290
		114	M24	16	220	260	M30	16	260	305
450A	18"	114	M24	20	220	260	M30	20	265	310
500A	20"	127	M24	20	235	275	M30	20	280	325
550A	22"	154	M30	20	275	320	M36	20	320	370
600A	24"	154	M30	20	275	320	M36	24	320	375
				8	100	100		8	120	120

Dimension

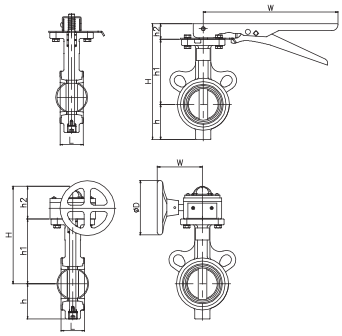

40~150A

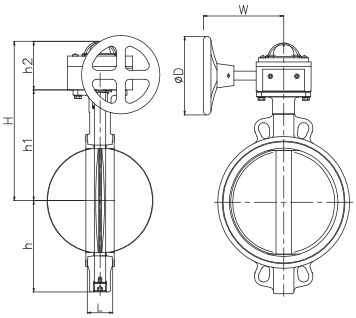

200~350A

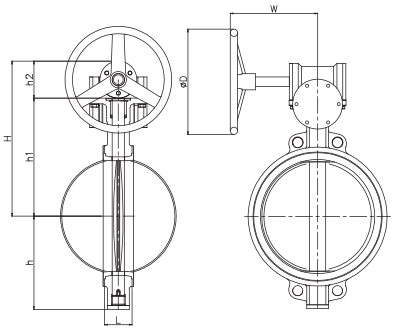

400A~

Concentric Butterfly Valve

(unit: mm)

VALVE SIZE		GEAR OPERATED							Weight
		L	h	h1	h2	H	W	ØD	kg
40A	1.5"	33	70	150	105	255	160	140	5.5
50A	2"	43	80	165	105	270	160	140	5.6
65A	2.5"	46	90	175	105	280	160	140	6.5
80A	3"	46	95	185	105	290	160	140	7
100A	4"	52	115	200	105	305	160	140	8.5
125A	5"	56	130	220	105	325	160	185	10.8
150A	6"	56	140	230	105	335	160	185	12.2
200A	8"	60	175	260	120	380	210	280	24
250A	10"	68	210	295	120	415	210	280	31
300A	12"	78	245	340	120	460	210	280	37
350A	14"	78	270	345	120	465	210	280	45
400A	16"	102	325	405	155	560	250	280	80
450A	18"	114	355	420	155	575	250	280	90
500A	20"	127	375	480	155	635	250	385	120
550A	22"	154	410	545	170	715	250	385	190
600A	24"	154	570	570	170	740	250	385	240
700A	28"	165	630	630	200	830	250	385	410
800A	32"	189	770	860	250	1110	385	385	460

VALVE SIZE		LEVER OPERATED						Weight
		L	h	h1	h2	H	W	kg
40A	1.5 "	33	70	150	35	185	230	3.5
50A	2"	43	80	165	35	200	230	3.6
65A	2.5 "	46	90	175	35	210	230	4.5
80A	3"	46	95	185	35	220	230	5
100A	4"	52	115	200	35	235	230	6.5
125A	5"	56	130	220	35	255	230	8.8
150A	6"	56	140	230	35	265	230	10.2

* Dimensions and design are subject to change without notice. Request certified drawings for use in preparing piping layouts.

Installation Instruction

1. Complete welding of flanges with no valve fitted.
2. Clean the inside of pipe first, and install valves at 10~20% opened position.
3. Operate with caution to find any jam of disc.
4. Use hand only when operating. (Do not use any tools.)

Dimension

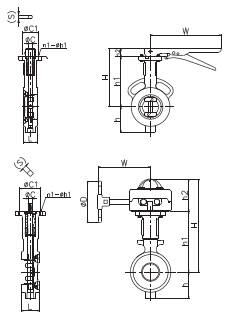

25~100A

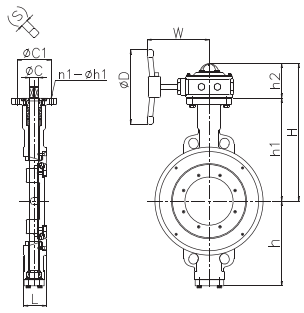

125~250A

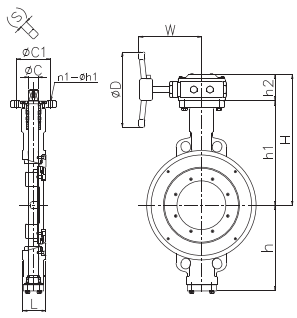

300~450A

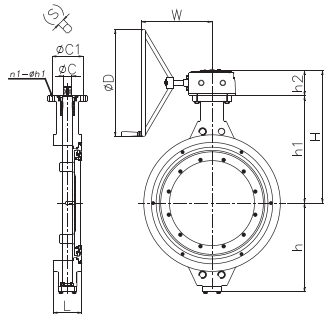

500A~

Off Set Type Butterfly Valve

(unit: mm)

VALVE SIZE		GEAR OPERATED											Weight
		L		h	h1	h2	H.	W	ØC(S)	ØD	n-h(Hole)	ØPCD	kg
		10K(1)	20K(2)										
25A	1"	42	42	50	100	90	190	150	12(9)	120	4-Ø9	70	3.5
40A	1.5"	42	42	55	110	90	200	150	12(9)	120	4-Ø9	70	3.9
50A	2"	44	44	65	145	90	235	150	12(9)	120	4-Ø9	70	4.7
65A	2.5"	44	44	80	155	90	245	150	12(9)	120	4-Ø9	70	5.7
80A	3"	46	46	85	170	90	260	150	12(9)	120	4-Ø9	70	5.9
100A	4"	52	52	95	190	90	280	150	16(11)	120	4-Ø9	70	7.5
125A	5"	62	56	140	195	105	300	180	20(14)	170	4-Ø11	102	15.2
150A	6"	62	56	160	210	105	315	180	20(14)	170	4-Ø11	102	18
200A	8"	84	60	215	270	105	375	180	28(22)	190	4-Ø11	102	30
250A	10"	91	68	255	310	105	415	180	28(22)	240	4-Ø11	102	57
300A	12"	101	78	270	350	140	490	250	35(27)	300	4-Ø18	140	80
350A	14"	114	78	315	370	140	510	270	40(27)	300	4-Ø18	140	98
400A	16"	114	102	350	420	140	560	270	45(36)	300	4-Ø18	140	126
450A	18"	114	114	390	430	140	570	270	45(36)	300	4-Ø18	140	151
500A	20"	127	127	420	455	130	585	340	45(36)	500	4-Ø22	165	200
550A	22"	154	154	445	515	130	645	340	45(36)	500	4-Ø22	165	250
600A	24"	154	154	470	575	130	705	340	50(36)	500	4-Ø22	165	310
650A	26"	165	165	495	580	130	710	380	50(36)	560	8-Ø18	205	510
700A	28"	165	165	550	580	130	840	380	70(K18)	560	8-Ø18	205	620
800A	32"	190	190	670	770	160	930	410	80(K22)	630	8-Ø18	254	820

VALVE SIZE		LEVER OPERATED							Weight
		L	h	h1	h2	H	W	S	kg
25A	1"	42	50	100	35	135	230	10	2.5
40A	1.5"	42	55	110	35	145	230	10	2.9
50A	2"	44	64	145	35	180	230	10	3.7
65A	2.5"	44	80	155	35	190	230	10	4.8
80A	3"	46	80	175	35	210	230	10	5
100A	4"	52	95	190	35	225	270	12	6.6

* Dimensions and design are subject to change without notice. Request certified drawings for use in preparing piping layouts.
* (1)Ductile Iron, 10K (2)Cast Steel, Stainless Steel, 10/20K

Installation Instruction

1. Remove the foreign materials prior to install the valves and use spacers of suitable sizes during the cleaning process.
2. Flange welding should be completed before the installation of the valve to avoid seat and disc damage.
3. Valve must be closed when valves are installing.
4. Valve should be fully closed prior to fastening the flange bolts and nuts.
5. Valve must be operated with hand only, Please don’t use any tools.

Dimension

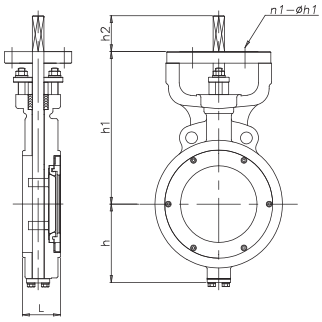

100~200A

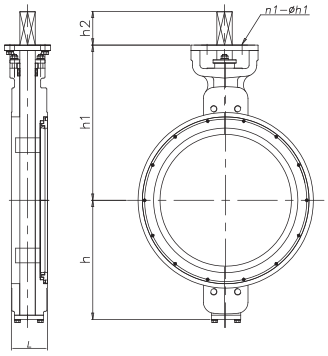

250~500A

3-Off Set Type Butterfly Valve

(unit: mm)

VALVE SIZE		GEAR OPERATED							Weight
		L	h	h1	h2	H	W	ØD	kg
100A	4"	54	150	200	55	255	140	120	23
125A	5"	57	180	245	70	315	180	170	30
150A	6"	64	195	280	70	350	180	190	44
200A	8"	71	225	285	70	355	180	240	55
250A	10"	81	265	335	105	440	250	300	63
300A	12"	92	290	365	105	470	270	300	85
350A	14"	102	340	435	105	540	270	300	130
400A	16"	114	360	452	105	557	270	300	190
450A	18"	127	395	500	130	630	340	500	210
500A	20"	154	465	570	130	700	340	500	330

* Dimensions and design are subject to change without notice. Request certified drawings for use in preparing piping layouts.

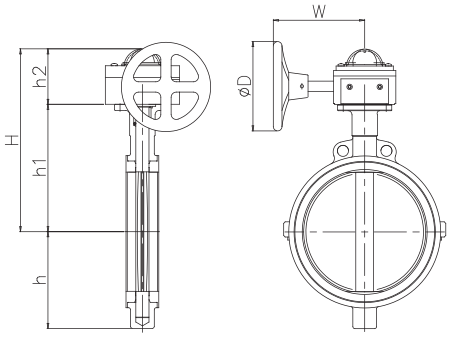

PTFE Lined Butterfly Valve

(unit: mm)

VALVE SIZE		GEAR OPERATED							Weight
		L	h	h1	h2	H	W	ØD	kg
50A	2"	43	70	140	90	230	150	120	5.6
65A	2.5"	46	85	155	90	245	150	120	6.5
80A	3"	46	90	160	90	250	150	120	7
100A	4"	52	110	180	90	270	150	120	8.5
125A	5"	56	125	195	105	300	180	170	15.2
150A	6"	56	135	200	105	305	180	170	18
200A	8"	60	170	240	105	345	180	190	30
250a	10"	68	200	275	105	380	180	240	57
300a	12"	78	225	315	140	455	250	300	80
350A	14"	78	260	350	140	490	270	300	98

* Dimensions and design are subject to change without notice. Request certified drawings for use in preparing piping layouts.

Dimension

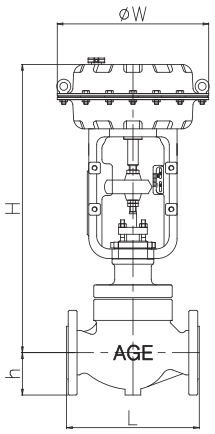

DIAPHRAGM ACTUATED GLOBE VALVE

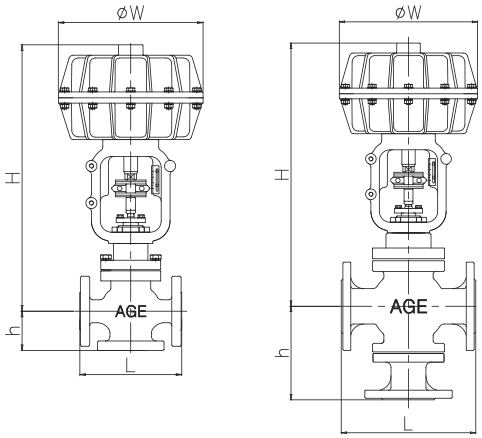

CYLINDER ACTUATED GLOBE VALVE

DIAPHRAGM ACTUATED GLOBE VALVE

(unit: mm)

Valve Size		L			h	H	Top Handle	ØW	Weight
mm	inch	10K/150#	20~30K/300#	40K/600#					kg
15A	1/2"	184	194	206	55	480	85	290	30
20A	3/4"	184	194	206	55	480	85	290	33
25A	1"	184	197	210	55	480	85	290	34
32A	1 1/4"	222	235	251	65	495	85	290	41
40A	1 1/2'	222	235	251	70	540	85	290	43
50A	2"	254	267	286	80	550	85	290	48
65A	2 1/2"	276	292	311	95	660	100	365	74
80A	3"	298	317	337	100	670	100	365	83
100A	4"	352	368	394	115	675	100	365	96
125A	5"	403	425	457	130	870	100	475	161
150A	6"	451	473	508	145	885	135	475	191
200A	8"	543	568	610	185	920	135	475	273
250A	10"	673	708	752	235	1250	105	590	506
300A	12"	737	775	819	240	1260	105	590	615

*Dimensions and design are subject to change without notice. Request certified drawings for use in preparing piping layouts.

CYLINDER ACTUATED GLOBE VALVE

(unit: mm)

Valve Size		L			h		Top Handle	ØW	Weight
mm	inch	10K/150#	20~30K/300#	40K/600#	2-way	3-way			kg
15A	1/2"	184	194	206	70	145	480	262	24
20A	3/4"	184	194	206	70	145	480	262	24
25A	1"	184	197	210	70	145	480	262	25
32A	1 1/4"	222	235	251	90	175	500	262	35
40A	1 1/2'	222	235	251	90	175	500	262	35
50A	2"	254	267	286	90	175	500	262	48
65A	2 1/2"	276	292	311	100	200	580	320	57
80A	3"	298	317	337	115	220	620	320	64
100A	4"	352	368	394	140	245	750	420	105
125A	5"	403	425	457	160	315	770	420	135
150A	6"	451	473	508	165	330	800	420	150
200A	8"	543	568	610	175	370	980	515	225
250A	10"	673	708	752	220	450	1130	515	330
300A	12"	737	775	819	260	500	1520	650	500

*Dimensions and design are subject to change without notice. Request certified drawings for use in preparing piping layouts.

Dimension

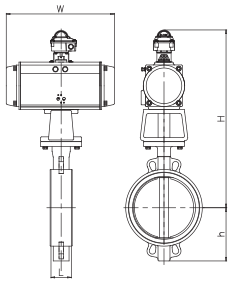

Pneumatic on off
Rubber seated butterfly valve

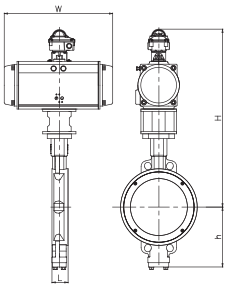

Pneumatic on off
2-Off set butterfly valve

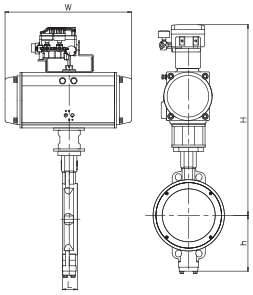

Pneumatic control
2-Off set butterfly valve

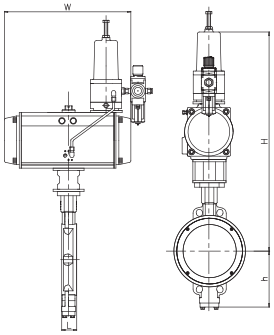

Pressure Regulating
2-Off set butterfly valve

RUBBER SEATED BUTTERFLY VALVE

(unit: mm)

Valve Size		L	h	H	W	Weight kg
40A	1 1/2"	40	70	445	168	16.6
50A	2"	43	80	454	168	16.7
65A	2 1/2"	46	90	480	184	18.4
80A	3"	46	95	495	204	19.6
100A	4"	52	115	525	262	22.8
125A	5"	56	130	560	268	27.6
150A	6"	56	140	590	301	31.3
200A	8"	60	175	640	390	43.1
250A	10"	68	210	730	458	55.6
300A	12"	78	245	820	525	70
350A	14"	78	270	845	532	89.3
400A	16"	102	325	910	532	143.8
450A	18"	114	355	960	602	179.2
500A	20"	127	375	1020	602	209.2

HP BUTTERFLY (PRV)

(unit: mm)

Valve Size	L		h	H	W	Weight kg
	10K(FCD)	20K(SC*)				
40A	42	42	55	504	168	16.3
50A	44	44	65	557	184	17.8
65A	44	44	80	576	210	20.5
80A	46	46	85	601	212	23.2
100A	52	52	95	630	225	27.1
125A	62	56	140	687	351	34.8
150A	62	56	160	711	365	43.1
200A	84	60	215	792	395	63.5
250A	91	68	255	855	408	101.8
300A	101	78	270	915	433	144.3
350A	114	78	315	919	464	187.7
400A	114	102	350	1060	496	215.7
450A	114	114	390	1094	496	278.5
500A	127	127	420	1161	557	350.5

*Dimensions and design are subject to change without notice. Request for certified drawings for use in preparing piping layouts.

HIGH PERFORMANCE BUTTERFLY VALVE

(unit: mm)

Valve Size		L		ON OFF			Weight	CONTROL			Weight
		10K(FCD)	20K(SC*)	h	H	W	kg	h	H	W	kg
25A	1"	42	42	50	390	168	14.6	50	400	168	15.1
40A	1.5"	42	42	55	410	168	15	55	410	168	16.3
50A	2"	44	44	65	450	168	16.6	65	500	184	17.8
65A	2.5"	44	44	80	470	184	18.3	80	520	204	20.5
80A	3"	46	46	85	500	204	20.2	85	540	262	23.2
100A	4"	52	52	95	520	262	24.3	95	560	268	27.1
125A	5"	62	56	140	580	268	34.3	140	630	301	34.8
150A	6"	62	56	160	620	301	37.1	160	650	390	43.1
200A	8"	84	60	215	690	390	54.6	215	720	458	63.5
250A	10"	91	68	255	745	458	90	255	790	525	101.8
300A	12"	101	78	270	805	525	124.3	270	850	532	144.3
350A	14"	114	78	315	920	532	161.8	315	960	532	187.7
400A	16"	114	102	350	960	532	215.2	350	1000	602	215.7
450A	18"	114	114	390	1000	602	240.2	390	1030	602	278.5
500A	20"	127	127	420	1070	602	327	420	1100	722	350.5

*Dimensions and design are subject to change without notice. Request for certified drawings for use in preparing piping layouts.

www.controlvalve.co.kr

AGE hopes to lead 21C's valve mechanism
based on outstanding engineering

AGE®

[Factory] #213, 2saneopdanji 2-gil, Waegwan-eup, Chilgok-gun,Gyeongsangbuk-do, Korea
[Contact us] **Tel** +82-54-976-9033 / **Fax** +82-54-977-9036 / **E-mail** age@controlvalve.co.kr